TAC 5

Regulation HRmural

P.LEMMENS
AIR MOVEMENT COMPANY

Installation and user's manual

TAC 5 Regulation HRmural

Installation and user's manual

P.LEMMENS
A Swegon Group company

TABLE OF CONTENTS

1. FUNCTIONALITIES OF THE REGULATION

This handbook describes the functionalities of the control boards mounted in HRmural and HRmural UP ECO air handling units.

The units of series HRmural are equipped with the TAC5 DM controller while the HRmural UP ECO with the TAC5 DR. The features supported by both boards are identical excepted for the wiring to the optional remote control (see §4.1.1) where a SAT MODBUS is needed for TAC5 DR.

The TAC5 DM/DR controller provides the following features:

- Monitoring of the fans (exhaust and supply) in chosen working mode: constant airflow (CA, CA kit necessary for ECO models), constant torque (TQ), constant pressure (CPs) or constant airflow linked to 0-10V signal (LS) (e.g. CO2 sensor).
- Management of 4 timeslots.
- Alarms on defects, set points, overpressure.
- Fire alarm airflow management.
- BOOST function, allowing forcing a pre-set airflow (supply/exhaust), overriding the assigned airflow. Activation :
  - either by contact (default),
  - or automatically from moisture threshold measured by a sensor connected to the control board[i].
- Automatic management of the 70% bypass to allow free cooling.
- Automatic management of inlet dampers (CT - via SAT3 – OR2 option).
- Heat exchanger antifreeze protection system by modulation of airflow or with an intelligent internal pre-heat electrical coil (KWin) or even by regulating the power of an external hydraulic pre-heat coil (BAin).
- Control of the post-heating (water or electrical) / cooling battery if mounted in the supply ducting (option)
- Control of the pre-heating (water or electrical) battery if mounted in the incoming fresh air ducting (option)
- LCD display on the controller of the settings and working fans.
- Advanced setup.

The following options can be combined with TAC5 DM/DR controller:

- SAT3 option :
  Circuit with 2 relays:
  - Information about the « Default alarm » and the « Pressure alarm » (on O.R.1)
  - Information about the « FAN ON » or the control of damper(s) CT (on O.R.2)
- SAT BA/KW option :
  - Regulation of 2 external exchangers (electrical/water, post-hot and/or post-cold) to keep a set temperature constant.
  - Regulation of an external hydraulic pre-heat coil for the heat exchanger antifreeze protection (BAin option)
  - Regulation of an external electrical pre-heat coil for the heat exchanger antifreeze protection (KWin option)
- RC: simple remote control with a LCD display (2x8 digits). SAT MODBUS option necessary for TAC5 DR.
- GRC: user-friendly colour touchscreen remote control. SAT MODBUS option necessary for TAC5 DR.
  - TAC5 DM: can be used without SAT MODBUS for network with less than 16 units and distance shorter than 100 meters).
  - TAC5 DR: SAT MODBUS option necessary.
- SAT MODBUS option enables the following options:
  - MODBUS RTU communication – configuration and visualization via a centralized technical management system.
  - RC and GRC for TAC5 DR.
- SAT ETHERNET Option: communication with MODBUS TCP/IP protocol on Ethernet over twisted pair 10 BASE T/100Base-TX IEEE 802.3 network. Allows interfacing with a BMS or EOLE4HR App for smartphone, tablet and PC with Android, iOS or Windows 7/8/10 operating system.
- SAT WIFI Option: communication with MODBUS TCP/IP protocol on wireless WIFI network. Allows interfacing with a BMS or EOLE4HR App for smartphone, tablet and PC with Android, iOS or Windows 7/8/10 operating system.
- SAT KNX Option: KNX communication.

See separate installation manual for each of these options.

2. GENERAL MAINTENANCE INSTRUCTIONS

2.1. General information

2.1.1. General schematic of the HRmural units

2.1.1.1. HRmural

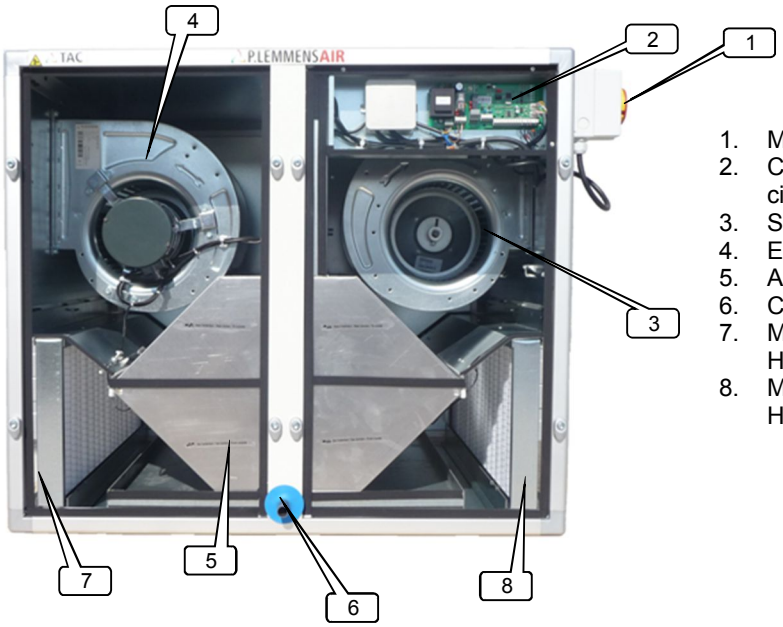

1. Main switch for power supply fans
2. Centralized wiring box of the TAC5 DM circuit (factory pre-wired)
3. Supply fan
4. Exhaust fan
5. Air/Air heat exchanger (+ bypass 70%)
6. Condensate drain
7. M5 class filter at fresh air inlet (G4 for HRmural(Up) (ECO) 450) or F7 in option
8. M5 filter on exhaust air (G4 for HRmural(Up) (ECO) 450)

2.1.1.2. HRmural UP ECO

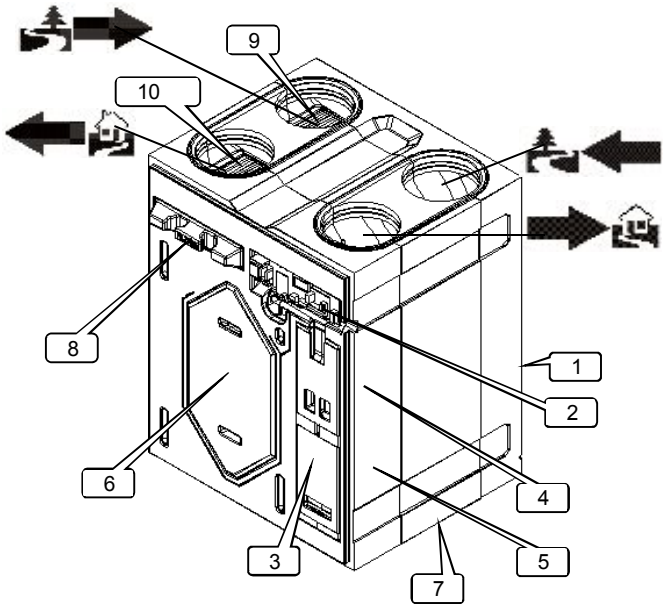

1. Power supply for fans and control (behind)
2. TAC5 Control (factory pre-wired)
3. Fan drawer
4. Supply air fan
5. Extraction fan
6. Air/Air heat exchanger (+100% by-pass)
7. Condensate drainage hose (underneath)
8. Filter group drawer
9. G4 fresh air filter
10. G4 extracted air filter

All electrical connections made the installer are in 1/2.

2.1.2. Schematic of the T° sensors positioning in the HRmural units:

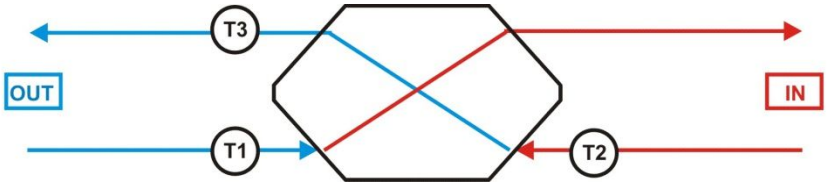

To allow easier identification of the temperature sensors 3 different wire colours are used:

- T1 : black wire
- T2 : white wire
- T3 : blue wire

2.1.3. Label located inside the unit

Label representing TAC5 DM control board hardware version 4:

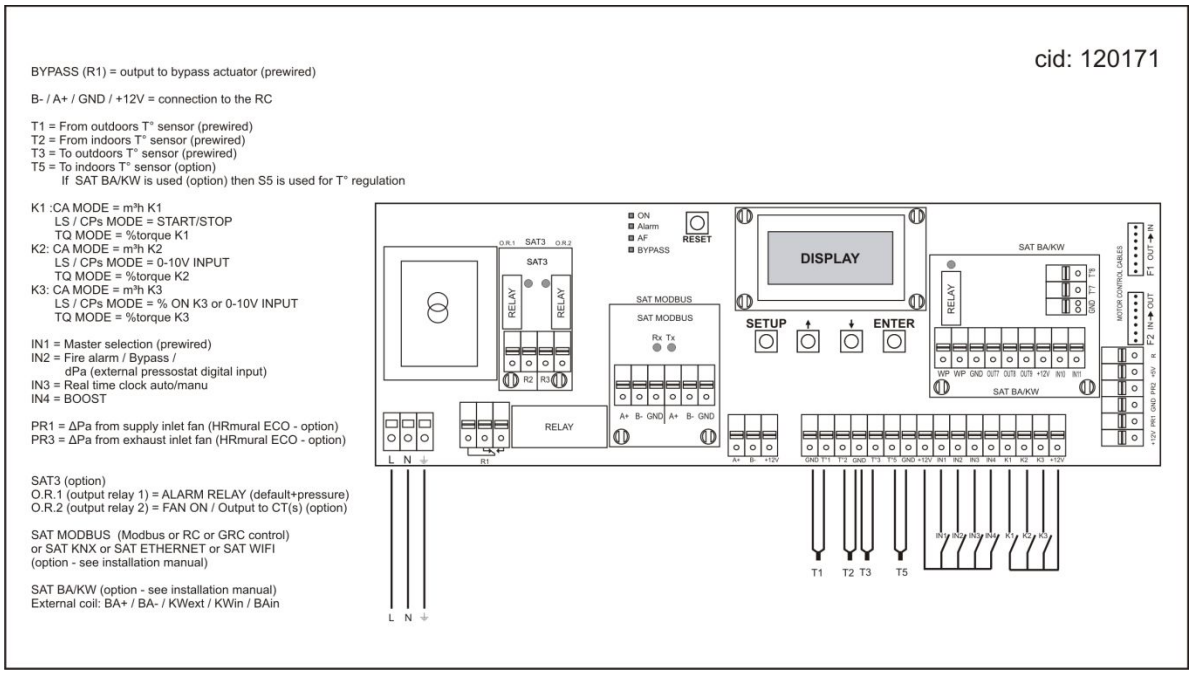

N.B. : TAC5 DR control board is identical to TAC5 DM but it has not the bloc of 3 connectors A+, B- and +12V.

3. REGULATION: CONFIGURATION – WIRING – OPERATING

The regulation is delivered fully factory pre-wired. Nevertheless, the I/O signals if any must still be wired by the installer.

Slots IN1 and +12V have been prewiring to allow the control of the unit via inputs/outputs on the TAC5 DM/DR.

3.1 Regulation of the Comfort Temperature

TAC5 DM/DR regulation ensures to keep the comfort temperature to the desired level in case of demand of

- Post heating: when at least one of the following option is present:
  - one external electric coil (KWext, see § 3.9),
  - one external hydraulic battery (BA+, see § 3.9),
- Post cooling: when one external hydraulic battery is present (BA-, see § 3.9).

The comfort temperature is by default the supply one, measured on T5 sensor (**Comfort on T5**) but can also be configured, via the advanced setup, as the one measured on T2 sensor (**Comfort on T2**) that is to say the extract temperature or the room temperature, if an optional room sensor is connected in place of T2 sensor.

3.2 Fan control

The various working modes give the user the choice on how the airflow or the fan torque must be modulated according to your application. The airflow will be by default modulated expect for the ECO models without CA kit or for all the other cases if the TQ mode has been selected in the setup menu and the fan torque will be modulated.
In all the working modes the supply fan will operate according to the assigned mode and parameters. The modulated magnitude (airflow or fan torque) of the exhaust fan will then equal to a percentage of the actual modulated magnitude of the supply fan (noted %EXH / SUP for ratio between exhaust and supply airflows) except for LS and CPs modes, when a dedicated signal has been connected with the proper configuration (see details below) enabling to provide an independent setpoint for the exhaust flow.
The TAC5 DM/DR allows configuration of one of the following 4 modes:

Airflow modulation

➢ **MODE CA :**
3 constant airflow assignments for the supply fan are determined by the user (m³h K1, m³h K2 and m³h K3).

➢ **LS MODE:**
The assigned supply airflow is a function of a 0-10V linear signal. The user defines the link with 4 parameters: Vmin, Vmax, m³h≡Vmin and m³h≡Vmax, applied to the following diagram:

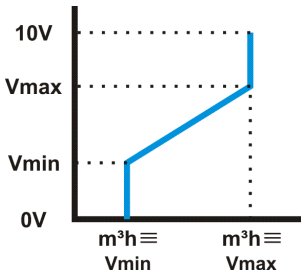

With m³h≡Vmin < or > m³h≡Vmax (positive or negative link).

Fan torque modulation

➢ **MODE TQ :**
3 constant torque assignments for the supply fan are determined by the user (%TQ K1, %TQ K2 et %TQ K3).

➢ **LS MODE:**
The assigned supply torque is a function of a 0-10V linear signal. The user defines the link with 4 parameters: Vmin, Vmax, %TQ≡Vmin and %TQ≡Vmax, applied to the following diagram:

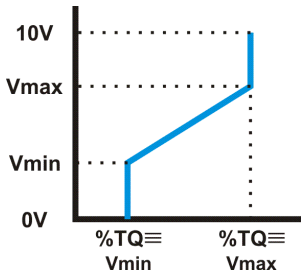

With %TQ≡Vmin < or > %TQ≡Vmax (positive or negative link).

Using the advanced setup, it is possible:

- To handle a second 0-10V signal:
  - either to control the supply fan with 2 different sensors by considering the highest voltage value of the 2 signals.
  - or to control the exhaust fan by the link with this second signal.
- To stop the fans once the input signal value has reached a certain upper and/or lower limit.

➢ **CPs MODE:**

CPs on supply: the airflow of the supply fan(s) is modulated so as to maintain constant a certain pressure value measured by a pressure sensor properly located in the ducting.

CPs on exhaust: the airflow of the exhaust fan(s) is modulated so as to maintain constant a certain pressure value measured by a pressure sensor properly located in the ducting.

➢ **CPs MODE:**

CPs on supply: the torque of the supply fan(s) is modulated so as to maintain constant a certain pressure value measured by a pressure sensor properly located in the ducting.

CPs on exhaust: the torque of the exhaust fan(s) is modulated so as to maintain constant a certain pressure value measured by a pressure sensor properly located in the ducting.

MODE OFF (for Airflow and fan torque modulation):
Is not a real working mode, it is a way to temporarily shortcut the TAC5 DM/DR master setup. It allows, if working in TAC5 DM/DR master, to stop the fans with the RC. But then to restart the fans it is required to choose one of the other 3 working modes.

3.2.1 CA mode: setup, operating instructions and wiring diagrams

The ECO models must be equipped with the CA kit in order to be able to use the CA mode (see §3.2.1.3)

3.2.1.1 Setup CA mode

The setup is made by means of the LCD screen and the 4 knobs SETUP, ↑, ↓ and ENTER of the TAC5 DM/DR.

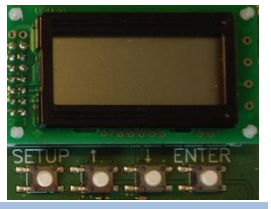

To start the setup, press the SETUP knob until the text "SETUP" appears on the screen. The idea is to select your choice with the ↑↓ knobs and then to confirm your choice by pressing 'ENTER'. The numbers are introduced digit by digit.

1	**LANGUAGE**	Choose your language (English, French, Dutch, German)
2	**HEATING T°? xx°C**	Only available with post-heating exchanger(s), select the comfort T° to the heating exchanger which is connected to the SAT BA.
3	**COOLING T°? xx°C**	Only available with post-cooling exchanger(s), select the comfort T° to the cooling exchanger which is connected to the SAT BA.
4	**WORKING MODE**	Select CA from CA, LS, CPs
5	**m³h K1?**	Type in supply airflow 1 (will be activated if contact between K1 and +12V of TAC5 DM/DR circuit is closed)
6	**m³h K2?**	Type in supply airflow 2 (will be activated if contact between K1 and +12V of TAC5 DM/DR circuit is closed)
7	**m³h K3?**	Type in supply airflow 3 (will be activated if contact between K1 and +12V of TAC5 DM/DR circuit is closed)
8	**%EXH/SUP**	Choose the rate between the exhaust airflow (fan F2) and the supply airflow (fan F1)
9	**TIME SEGMENT?N**	Select Y to activate the time segment scheduling function
10	**CONFIG TIME? N**	Select 'Y' to activate time segment function
11	**…**	For more details see § 3.3
12	**PRESSURE ALARM?**	The pressure alarm is optional. If you do not wish it select N and skip to step 18. Otherwise select Y. For more details see §3.4.1
13	**ΔP SUP**	Type in the pressure increment for the supply airflow.
14	**ΔP EXH**	Type in the pressure increment for the exhaust airflow.
15	**INIT Pa REF?**	Do you wish to (re-)configure the reference pressure for the supply and the exhaust airflows? Y or N. (this is optional if it has been done previously)

16	m³h INIT	If Y is selected, enter nominal airflow at which you wish to initialize the reference pressure. (same airflow for exhaust and supply air)
17	Pa REF INIT xxxx m³h xxxx Pa	Initializing the reference pressure… After +/-1 minute, the system will memorize the calculated pressure value of the fan as the reference pressure. While initializing the airflow and pressure on F1 is displayed.
18	ALARM RESET?	Possibility to reset the alarms. Y or N?
19	END SETUP	End

3.2.1.2 Operating and wiring diagrams

One of the 3 assignment constant airflows (m³h K1, m³h K2 and m³h K3) is selected using the K1/K2/K3 terminals on TAC5 DM/DR. The exhaust airflow is equal to (%EXH/SUP) of the supply airflow.

Wiring diagrams

a) Wiring 1 circuit to 3 external contacts

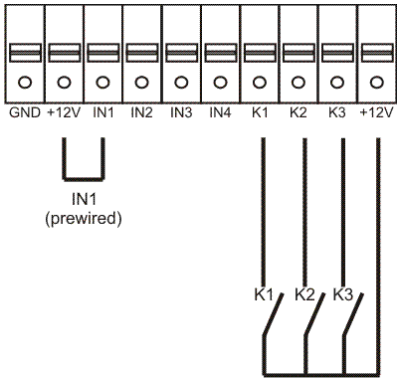

K1 closed ⇨ airflow m³h K1
K2 closed ⇨ airflow m³h K2
K3 closed ⇨ airflow m³h K3
K1/K2/K3 open ⇨ soft stop
Caution K1/K2/K3: Use gold-plated contacts only.

b) Wiring 1 circuit to 1 COM4 (PLC 4 positions switch)

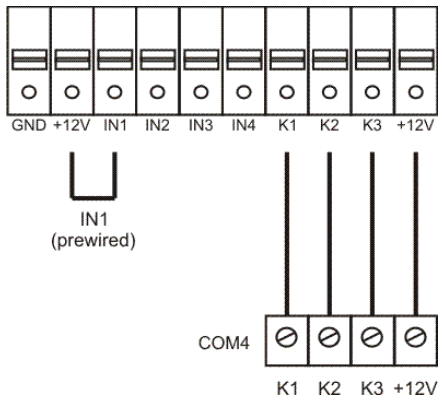

c) Wiring several circuits to 3 external contacts

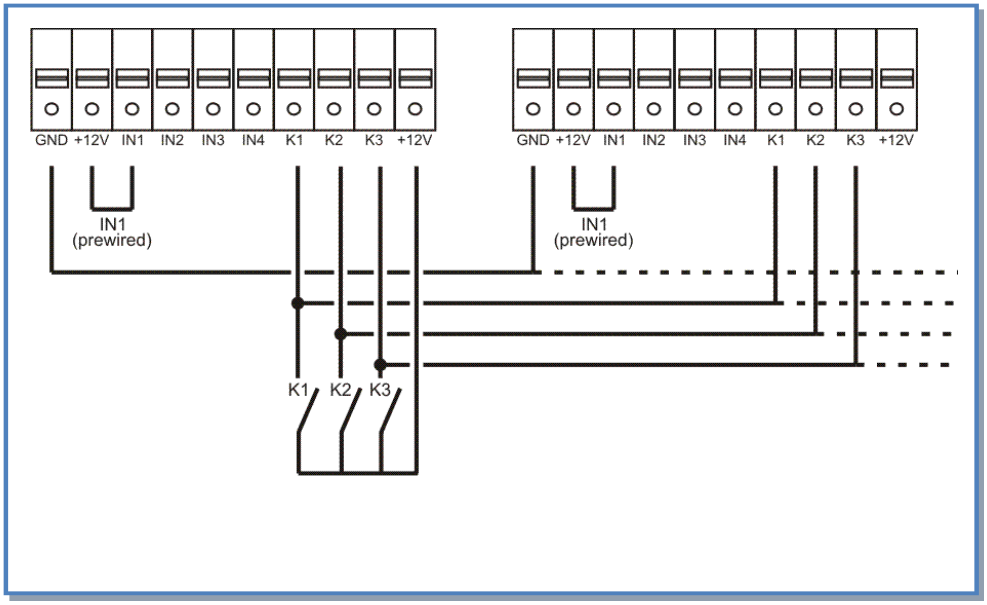

d) Wiring several circuits to 1 COM4

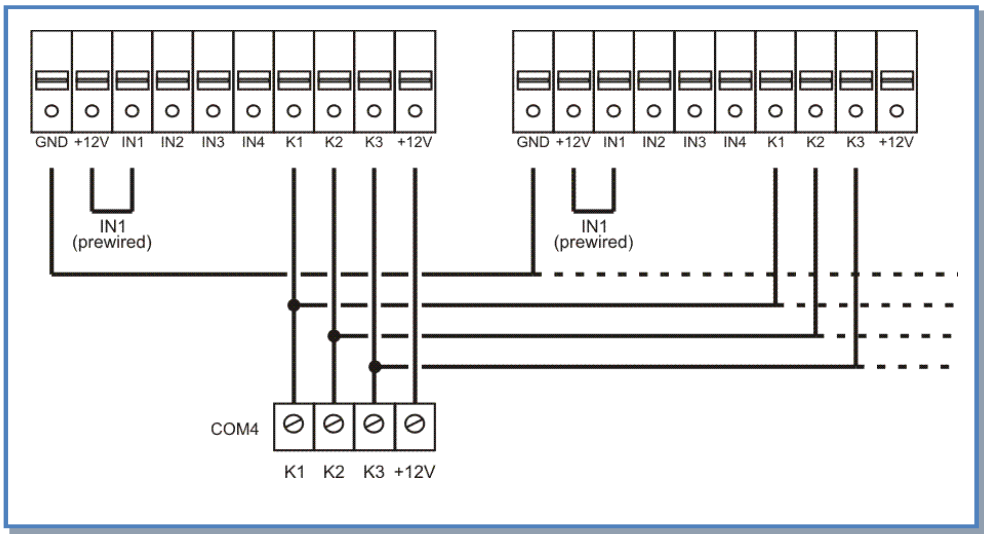

3.2.1.3 CA Kit option for ECO models

The CA kit option consists in one pressure sensor for each fan and enables the ECO models to use the CA mode and to modulate the airflow instead of the fan torque in LS and CPs mode.

3.2.1.3.1 Mounting

T inlet air pressure nozzle : fix the nozzle (see figure here below) thanks to 2 self-drilling screws taking care to put the nozzle as near as possible to the flow entering in the fan as indicated in the following figure.

Connect the pipe, which goes to the pressure sensor, to one of the two air outlets and clog the other.

Bottom view of the inlet air pressure:

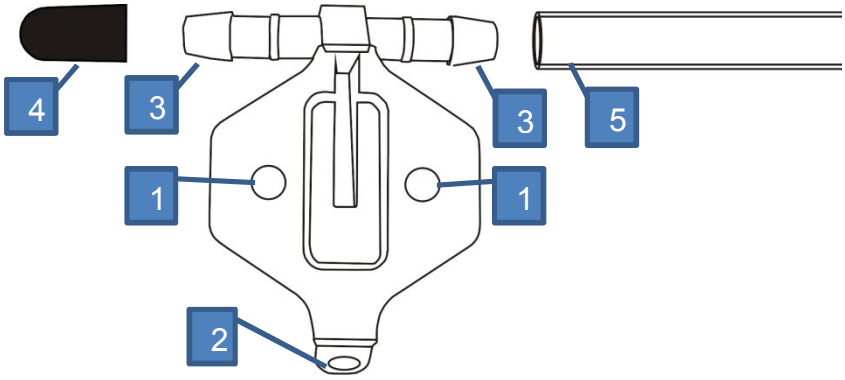

1 Fixing holes
2 Air intake
3 Air output
4 Cap
5 Pipe connected to pressure sensor

T inlet air pressure nozzle mounting:

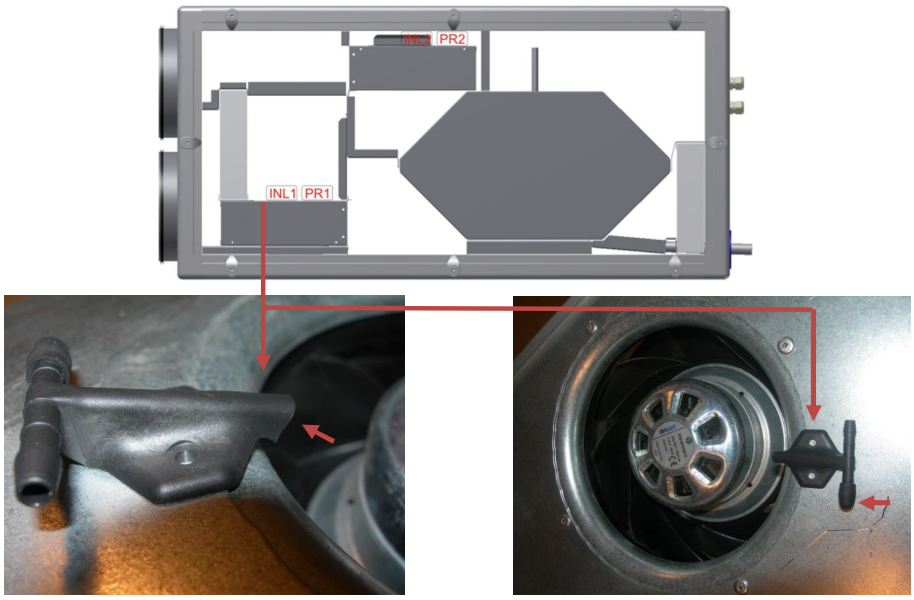

The pressure sensors should be mounted according to the following layout:

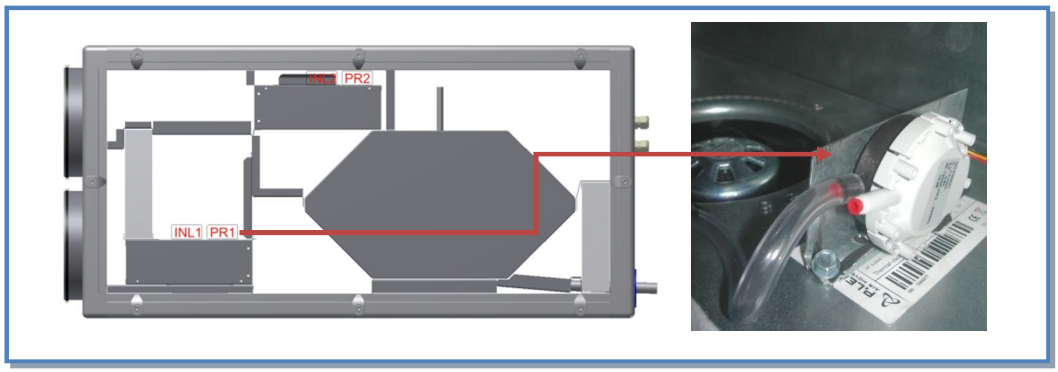

3.2.1.3.2 Wiring diagram

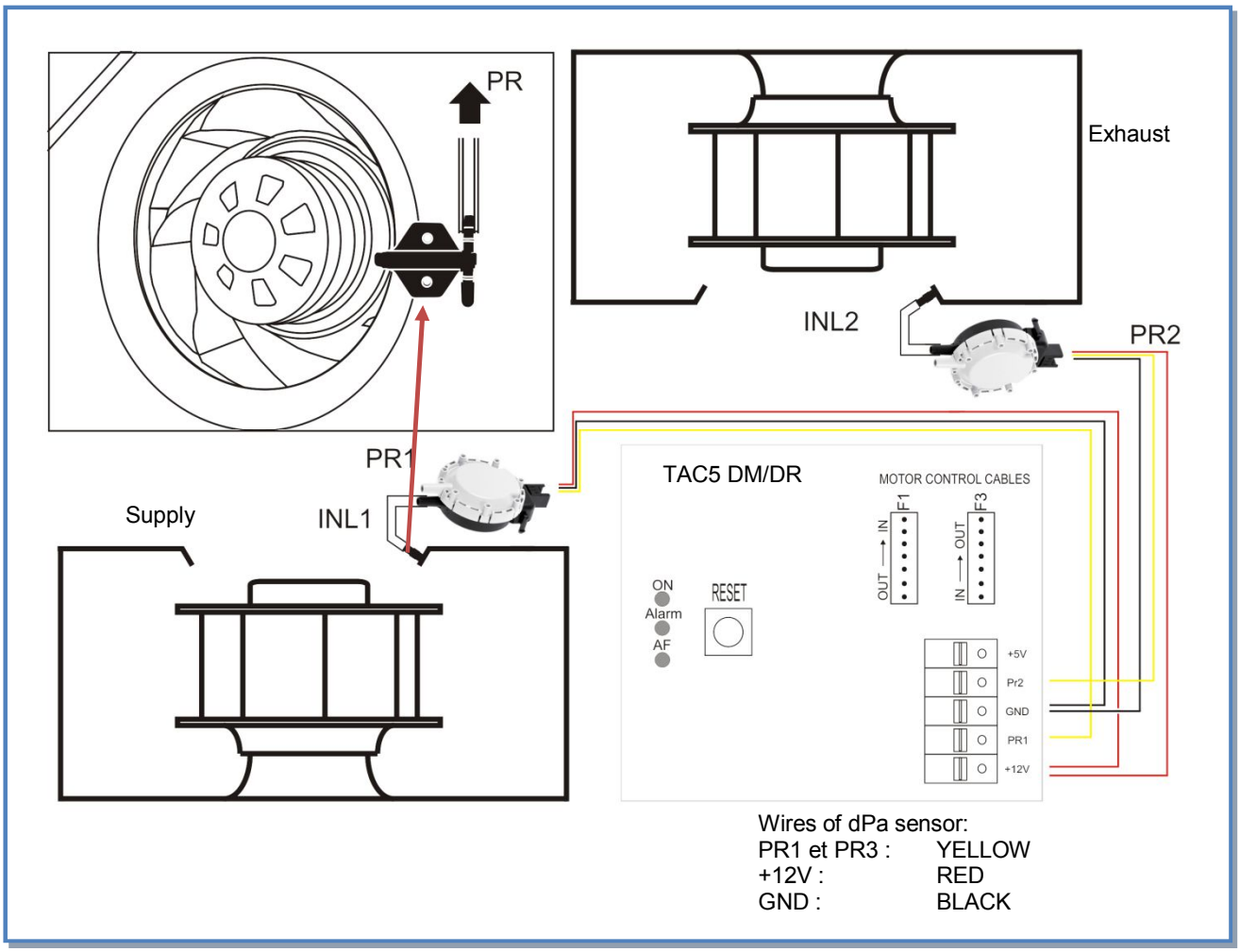

3.2.1.3.3 Setup

In product setup:
CODE = 5030
BW WITH SENSOR = Yes.
MODE TQ = No.

To start product setup: press ↑and ↓simultaneously until 'PRODUCT SETUP' appears on the screen. Make selection via ↑ ↓ buttons, then press ENTER to confirm. Numbers are introduced digit by digit.

3.2.2 TQ Mode: setup, operating instructions and wiring diagrams

3.2.2.1 Setup TQ mode

The TQ mode can be directly selected for the ECO models without the CA kit option but, for the other cases, shall be allowed through the setup menu.

The setup is made by means of the LCD screen and the 4 knobs SETUP, ↑, ↓ and ENTER of the TAC5 DM/DR.

To start the setup, press the SETUP knob until the text "SETUP" appears on the screen.
The idea is to select your choice with the ↑↓ knobs and then to confirm your choice by pressing 'ENTER'. The numbers are introduced digit by digit.

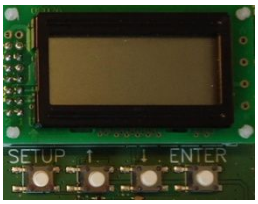

1	**LANGUAGE**	Choose your language (English, French, Dutch, German)
2	**HEATING T°? xx°C**	Only available with post-heating exchanger(s), select the comfort T° to the heating exchanger which is connected to the SAT BA/KW.
3	**COOLING T°? xx°C**	Only available with post-cooling exchanger(s), select the comfort T° to the cooling exchanger which is connected to the SAT BA/KW.
4	**WORKING MODE**	Select TQ from TQ, LS, CPs
5	**%TQ K1?**	Type in supply fan(s) torque 1 (will be activated if contact between K1 and +12V of TAC5 DM/DR circuit closed)
6	**%TQ K2?**	Type in supply fan(s) torque 2 (will be activated if contact between K1 and +12V of TAC5 DM/DR circuit closed)
7	**%TQ K3?**	Type in supply fan(s) torque 3 (will be activated if contact between K1 and +12V of TAC5 DM/DR circuit closed)
8	**%EXH/SUP**	Type in ratio between exhaust (fan F2) and supply (fan F1) fan torques.
9	**CONFIG TIME? N**	Select Y to setup hour and date.
10	**TIME SEGMENT?N**	Select Y to activate the time segment scheduling function
11	**…**	For more details see § **Error! Reference source not found.**3
12	**ALARM RESET?**	Possibility to reset the alarms. Y or N?
13	**END SETUP**	End

3.2.2.2 Operating and wiring diagrams

One of the 3 assignment constant fan torque (%TQ K1, %TQ K2 and %TQ K3) is selected using the K1/K2/K3 terminals on TAC5 DM/DR. The exhaust constant fan torque is equal to (%EXH/SUP) of the supply fan torque.

Wiring diagram

a) Wiring 1 circuit to 3 external contacts

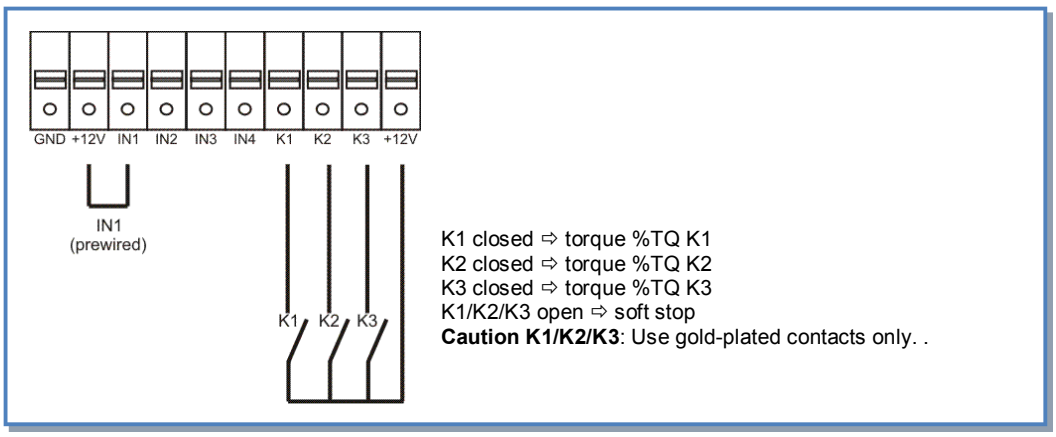

b) Wiring 1 circuit to 1 COM4 (PLC 4 positions switch)

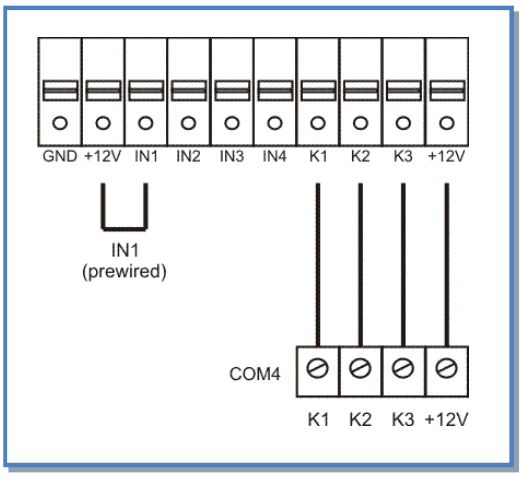

c) Wiring several circuits to 3 external contacts

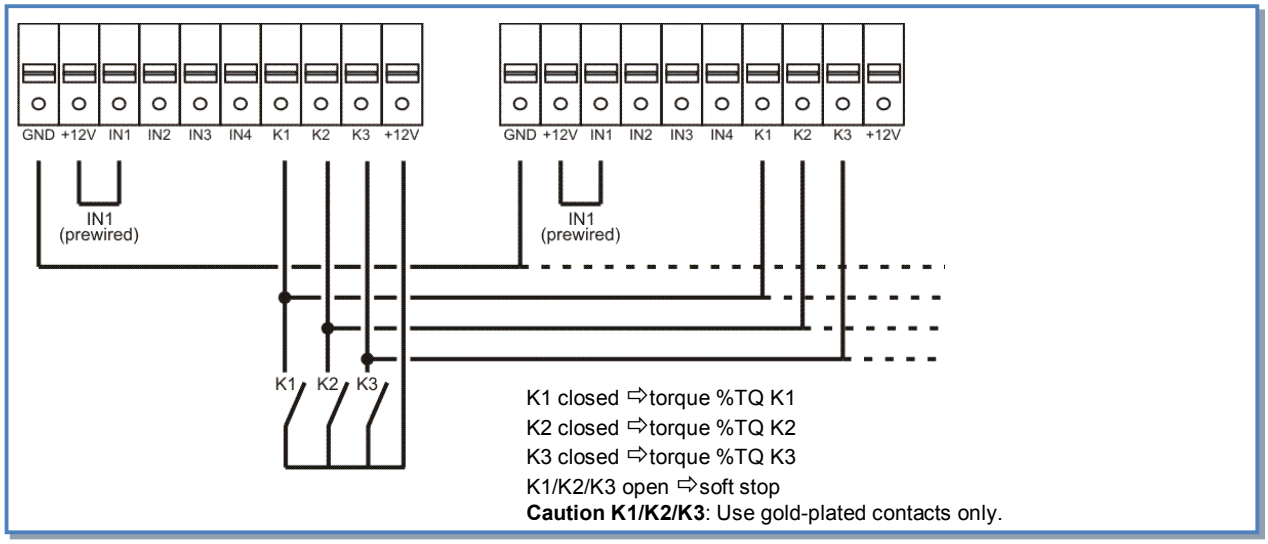

d) Wiring several circuits to 1 COM4

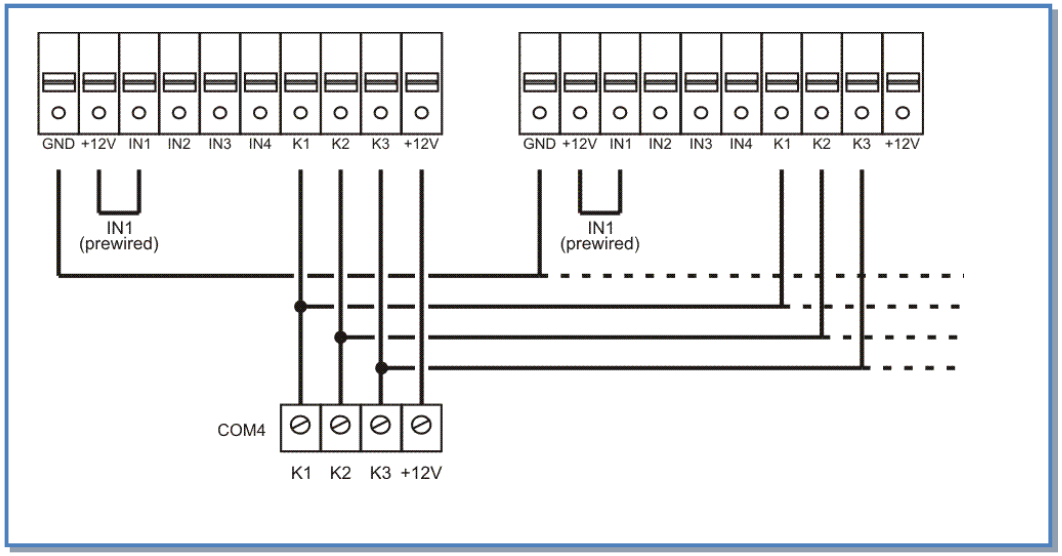

3.2.3 LS mode: setup, operating instructions and wiring diagrams

3.2.3.1 Setup LS mode

The setup is made by means of the LCD screen and the 4 knobs SETUP, ↑, ↓ and ENTER of the TAC5 DM/DR.

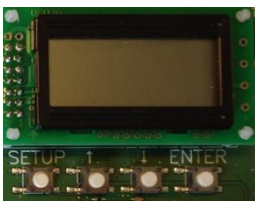

To start the setup, press the SETUP knob until the text “SETUP” appears on the screen. The idea is to select your choice with the ↑↓ knobs and then to confirm your choice by pressing ‘ENTER’. The numbers are introduced digit by digit.

1	**LANGUAGE**		Choose your language (English, French, Dutch, German)
2	**HEATING T°? xx°C**		Only available with post-heating exchanger(s), select the comfort T° to the heating exchanger which is connected to the SAT BA.
3	**COOLING T°? xx°C**		Only available with post-cooling exchanger(s), select the comfort T° to the cooling exchanger which is connected to the SAT BA.
4	**WORKING MODE**		Select LS from CA/TQ, LS, CPs
5	**V min?**		Select minimum voltage value
6	**V max?**		Select maximum voltage value
7	**m³/h**	**≡Vmin**	If airflow modulation, select constant airflow value for minimum voltage Vmin
	%TQ		If fan torque modulation, select constant supply fan torque value for minimum voltage Vmin
8	**m³/h**	**≡Vmax**	If airflow modulation, select constant airflow value for maximum voltage Vmax
	%TQ		If fan torque modulation, select constant supply fan torque value for maximum voltage Vmax
9	**% on K3?**		Select the multiplier for the modulated magnitude (airflow/fan torque) when contact between terminals +12V and K3 in the TAC5 DM/DR is closed.
10	**%EXH/SUP**		Type in ratio between exhaust (fan 2) and supply (fan 1) modulated magnitude (airflow/fan torque).
11	**TIME SEGMENT?N**		Select Y to activate the time segment scheduling function
12	**CONFIG TIME? N**		Select 'Y' to activate time segment function
13	**…**		For more details see § 3.3
If airflow modulation			
14	**PRESSURE ALARM?**		The pressure alarm is optional. If you do not wish it select N and skip to step 20. Otherwise select Y. For more details see §3.4.1
15	**ΔP SUP**		Type in the pressure increment for the supply airflow.
16	**ΔP EXH**		Type in the pressure increment for the exhaust airflow.
17	**INIT Pa REF?**		Do you wish to (re-)configure the reference pressure for the supply and the exhaust airflows? Y or N. (this is optional if it has been done previously)
18	**m³h INIT**		If Y is selected, enter nominal airflow at which you wish to initialize the reference pressure. (same airflow for exhaust and supply air)
19	**Pa REF INIT** **xxxx m³h** **xxxx Pa**		Initializing the reference pressure… After +/-1 minute, the system will memorize the calculated pressure value of the fan as the reference pressure. While initializing the airflow and pressure on F1 is displayed.
20	**ALARM RESET?**		Possibility to reset the alarms. Y or N?
21	**END SETUP**		End
If fan torque modulation			
14	**ALARM RESET?**		Possibility to reset of the alarms. Y or N?
15	**END SETUP**		End

3.2.3.2 Operating and wiring diagrams

The assignment value for the supply constant airflow (or torque) is a function of a 0-10V signal connected to terminals K2 of the TAC5 DM/DR circuit. The link between voltage and airflow is linear. The exhaust constant airflow (or torque) is equal to %EXH/SUP of the supply airflow (except if 2 separate 0-10V signals are used to determine exhaust and supply constant airflows, see advanced setup).

- Starting/stopping the fan is carried out with the entry K1 of the TAC5 DM/DR circuit.
- The 0-10V signal is connected to entry K2 and GND of the TAC5 DM/DR circuit.
- The K3 entry of the TAC5 DM/DR circuit can be used:
    - either, by default, to activate a sleeping factor (% on K3)
    - or, through advanced setup configuration, to handle a second 0-10V signal:
        - either to control the supply fan with 2 different sensors by considering the highest voltage value of the 2 signals.
        - or to control the exhaust fan by the link with this second signal.

3.2.3.2.1 Wiring diagrams with only one 0-10V signal (default)

a) Wiring to 1 circuit

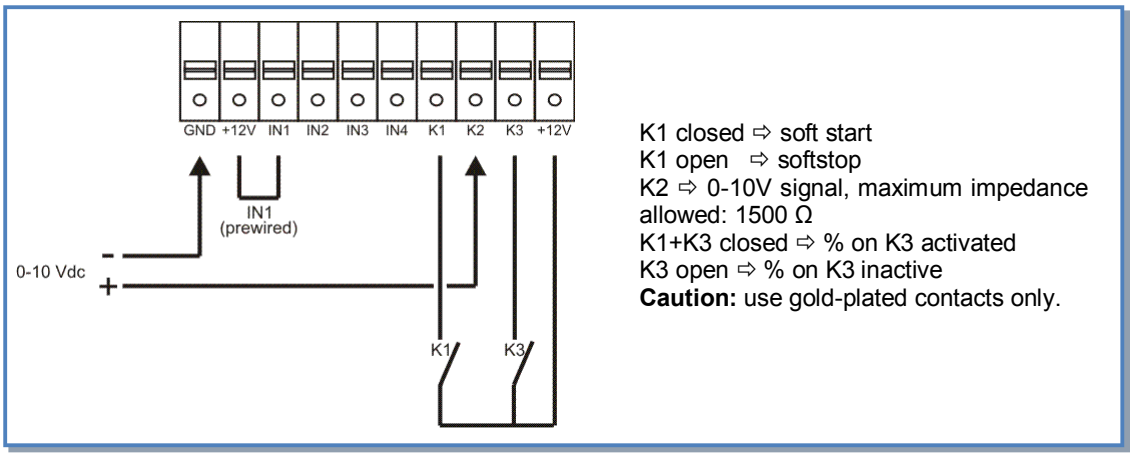

b) Wiring to several circuits in parallel

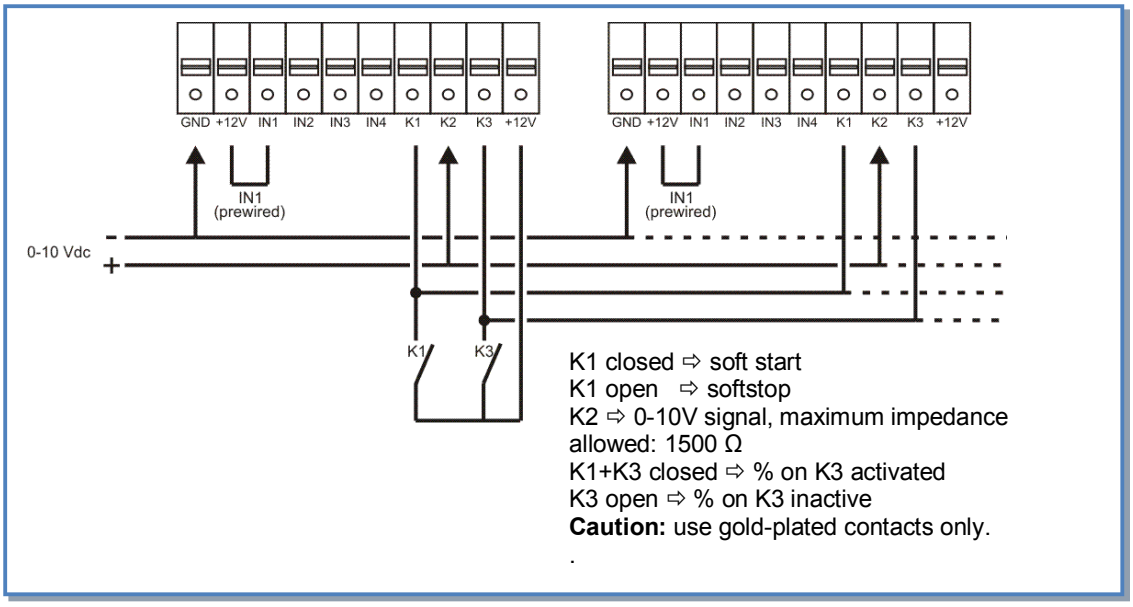

3.2.3.2.2 Wiring diagrams with two 0-10V signals (via advanced setup)

a) Wiring to 1 circuit

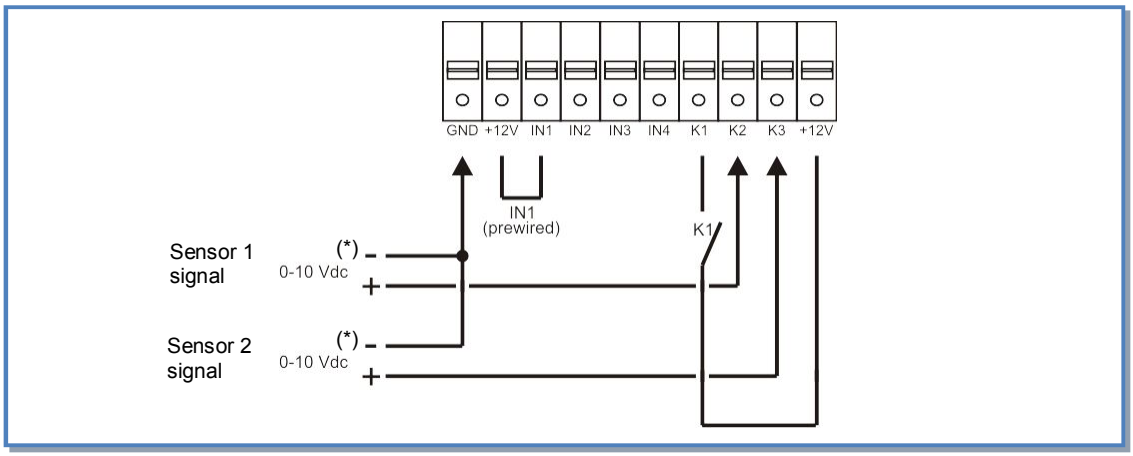

b) Wiring to several circuits in parallel

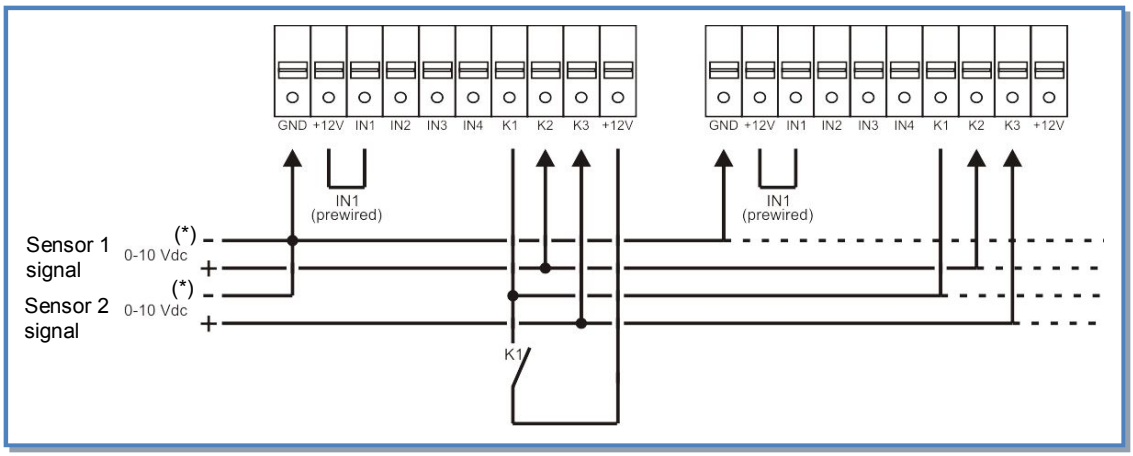

(*)
K1 closed ⇨ soft start
K1 open ⇨ softstop
K2 ⇨ 0-10V signal, maximum impedance allowed: 1500 Ω
K3 ⇨ 0-10V signal of second sensor:

- either for supply (consider the highest value between signals on K2 and K3)
- or for exhaust.

Maximum impedance allowed 1500Ω.

Caution: use gold-plated contacts only.

3.2.4 CPs mode: setup, operating instructions and wiring diagrams

3.2.4.1 Setup CPs mode

The setup is made by means of the LCD screen and the 4 knobs SETUP, ↑, ↓ and ENTER of the TAC5 DM/DR.

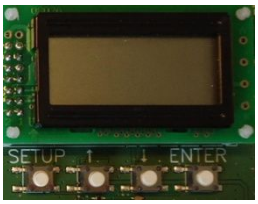

To start the setup, press the SETUP knob until the text "SETUP" appears on the screen. The idea is to select your choice with the ↑↓ knobs and then to confirm your choice by pressing 'ENTER'. The numbers are introduced digit by digit.

1	**LANGUAGE**	Choose your language (English, French, Dutch, German)
2	**HEATING T°? xx°C**	Only available with post-heating exchanger(s), select the comfort T° to the heating exchanger which is connected to the SAT BA.
3	**COOLING T°? xx°C**	Only available with post-cooling exchanger(s), select the comfort T° to the cooling exchanger which is connected to the SAT BA.
4	**WORKING MODE**	Select CPs from CA, LS, CPs
5	**CPs on SUPPLY**	Select 'constant pressure' on supply airflow (select SUPPLY), or on the exhaust airflow (select EXHAUST) or on both airflows (select SUP+EXH). If SUP+EXH is selected le setup jumps to step 8
6	**% on K3?**	Input of multiplier on the CPs assignment when contact between terminals +12V and K3 in the TAC5 DM/DR circuit is closed.
7	**%EXH/SUP**	Type in ratio between exhaust (EXH) and supply (SUP) modulated magnitude (airflow/fan torque).
8	**TIME SEGMENT?N**	Select Y to activate the time segment scheduling function
9	**CONFIG TIME? N**	Select 'Y' to activate time segment function
10	**…**	For more details see § 3.3
11	**INIT CPs REF? N**	New initialization of the CPs constant pressure assignment? Select Y to activate resetting of the pressure assignment.
12	**INIT via AIRFLOW?**	If airflow modulation and If Y is selected in 11 then select if you want to initialize the CPs reference automatically via the airflow or manually via the pressure value.
	INIT via %TQ?	If fan torque modulation and if Y is selected in 11 then select if you want to initialize the CPs reference automatically via the fan torque or manually via the pressure value.
If INIT via AIRFLOW or TORQUE: The pressure setpoint is automatically determined by the TAC5 DM/DR		
13	**INIT SUP** **0000 m³h** **000 %TQ**	Enter nominal modulated magnitude (airflow or fan torque) to determine assignment pressure CPs (if SUPPLY or SUP+EXH was selected at step 5).
14	**INIT EXH** **0000 m³h** **000 %TQ**	Enter nominal modulated magnitude (airflow or fan torque) to determine the pressure assignment CPs on the exhaust (if EXHAUST or SUP+EXH was selected at step 5).
15	**INIT SUP** **xx,x V** **INIT SUP** **xxxx m³** **xxx %TQ**	Initializing of CPs busy (if SUPPLY or SUP+EXH was selected at step 5). After 1 minute the system will memorize the pressure measured by the sensor corresponding to the nominal modulated magnitude (airflow or fan torque). Display of the actual modulated magnitude (airflow or fan torque) of the supply fan and of the actual sensor value.

16	**INIT EXH** **xx,x V** **INIT EXH** **xxxx m³** **xxx %TQ**	Resetting of CPs assignment on exhaust air busy (if EXHAUST or SUP+EXH was selected at step 5). After 1 minute the system will memorize the pressure measured by the sensor corresponding to the nominal airflow. Display of exhaust fan's actual airflow and of the sensor's actual value while resetting.
17	**ALARM RESET?**	Possibility to reset the alarms Y or N
18	**END SETUP**	The configuration of the system is finished.
If INIT via PRESSURE : Fill the setpoint pressure		
13	**SUP REF?** **xx,x V**	Enter the pressure assignment value for the supply air (if SUPPLY or SUP+EXH were selected at step 5).
14	**EXH REF?** **xx,x V**	Enter the pressure assignment value for the exhaust (if EXHAUST or SUP+EXH was selected at step 5).
15	**ALARM RESET?**	Possibility to reset the alarms Y or N
16	**END SETUP**	The configuration of the system is finished

3.2.4.2 Operating and wiring diagrams

CPs on SUPPLY air: The airflow delivered by the supply fan is automatically modulated to obtain a constant pressure as measured by the pressure sensor in the duct. The exhaust airflow is equals to %EXH/SUP of the supply airflow.

CPs on EXHAUST air: The airflow delivered by the exhaust fan is automatically modulated to obtain a constant pressure as measured by the pressure sensor in the duct. The supply airflow is equals to 1/ (%EXH/SUP) of the exhaust airflow.

CPs on SUPLY + EXHAUST air: the supply fan's airflow is automatically modulated to obtain a constant pressure as it is measured by a pressure sensor connected to K2. And the exhaust t fan's airflow is automatically modulated to obtain a constant pressure as it is measured by a pressure sensor connected to K3.

- The start/stop of the fans is controlled by the K1 entry on the TAC5 DM/DR circuit.
- The pressure sensor is connected to entry K2 of the TAC5 DM/DR circuit. If CPs on SUPPLY+EXHAUST is selected, connect the supply air's pressure sensor on terminals K2 and GND, and the exhaust air's pressure sensor on terminals K3 et GND.
- The K3 entry of the TAC5 DM/DR circuit can be used to activate a second set (% on K3 or pressure sensor on K3).

3.2.4.2.1 Wiring diagram if CPs on SUPPLY or CPs on EXHAUST

a) Wiring to 1 circuit

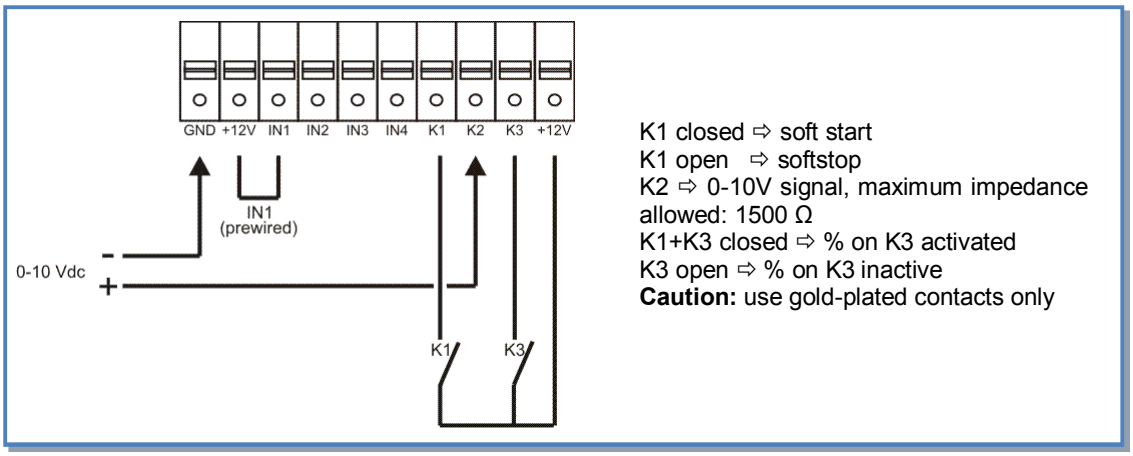

b) Wiring to several circuits in parallel

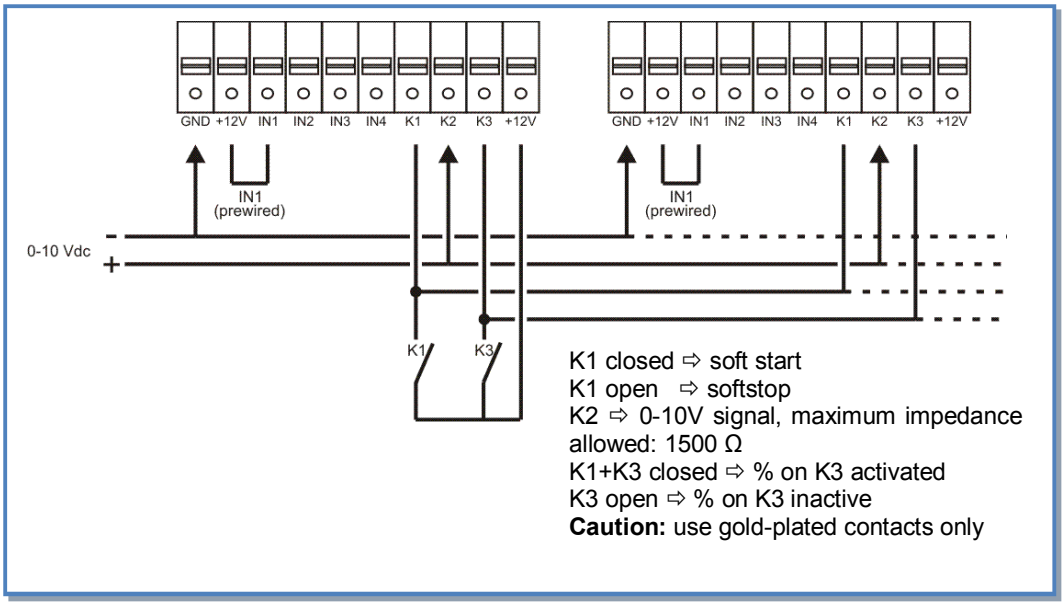

3.2.4.2.2 Wiring diagram if CPs on SUPPLY and EXHAUST

a) Wiring to 1 circuit

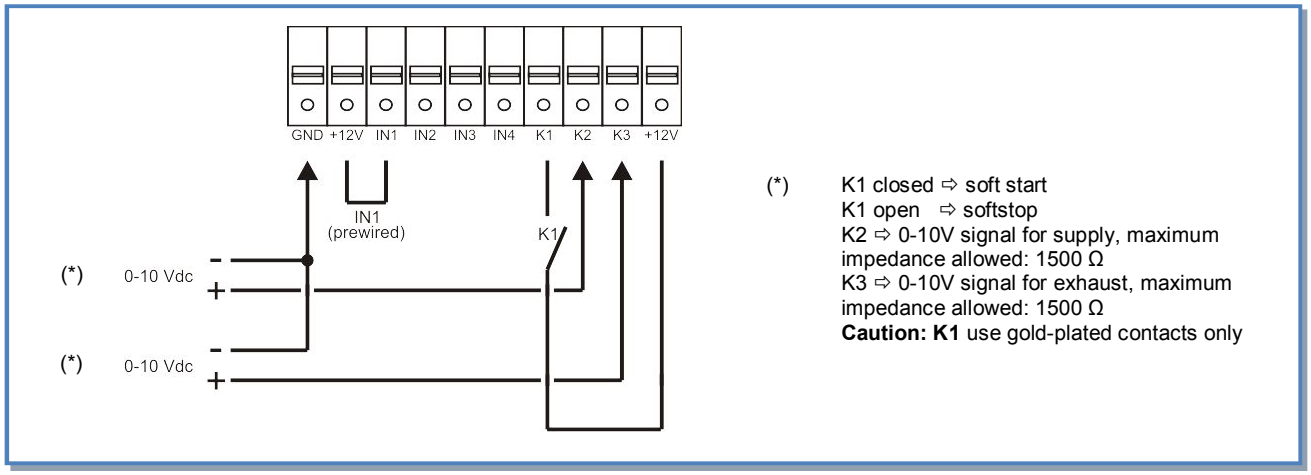

b) Wiring to several circuits in parallel

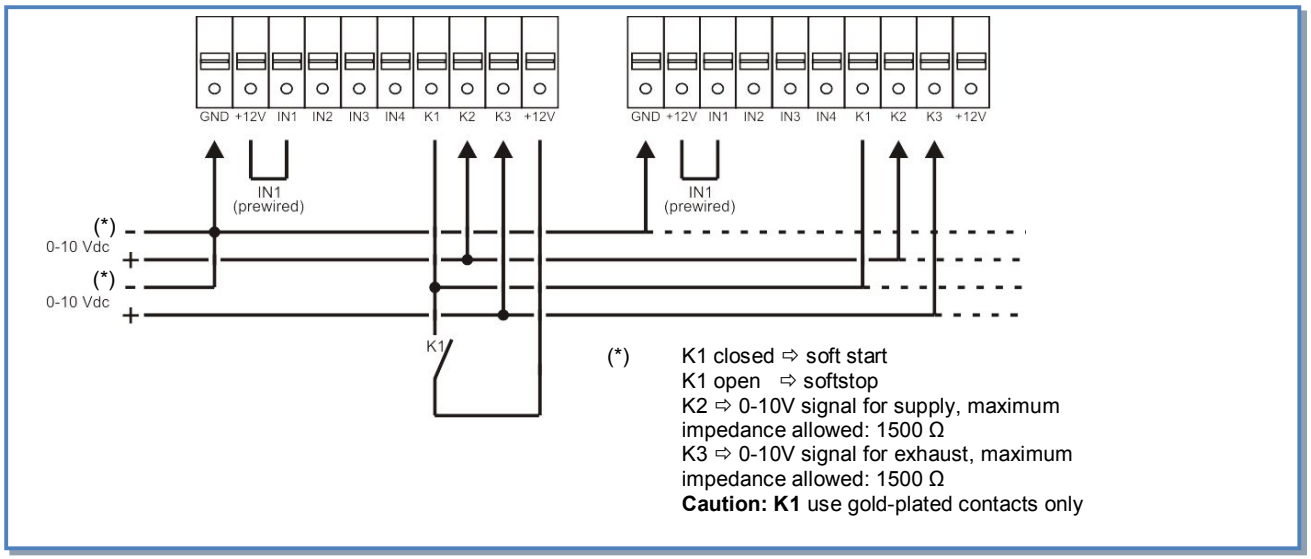

3.3 Time slots schedules

The TAC5 DM/DR regulation allows to configure 4 time slots (TS) and to set OFF days (fans will be stopped from 00:00 to 23:59).

For each time slot select:

- In CA mode: which airflow by selecting m³h K1 / m³h K2 / m³h K3 / OFF (stop).
- In TQ mode: which torque by selecting %TQ K1 / %TQ K2 / %TQ K3 / OFF (stop)
- In LS mode with only one 0-10V signal (default): the link LS (percentage of the nominal link) and the rate of the exhaust airflow by the supply airflow.
- In LS mode with one 0-10V signal for supply and one 0-10V signal for exhaust (via advanced setup): one link LS (percentage of the nominal link) for supply and one for exhaust.
- In CPs mode on supply or exhaust: the pressure setpoint (percentage of the nominal setpoint) and the rate of the exhaust airflow by the supply airflow.
- In CPs mode on supply and exhaust: one pressure setpoint (percentage of the nominal setpoint) for supply and one for exhaust.

And for each day of the week select: AUTO / OFF (operate as a normal day or as an OFF day).

3.3.1 Setup

…	…	…
1	**CONFIG TIME? N**	Select 'Y' to configure time and date.
2	**SET TIME xx:xx**	Enter time
3	**SET DATE xx/xx/xx**	Enter date
4	**TIME SEGMENT? N**	Select 'Y' to activate time segment function
If CA mode		
5	**TIME 1: --:--**	Enter TS1 starting time. If empty time slot is inactive.
6	**SUPPLY 0000 m³h**	For TS1, enter supply airflow (0000 = fan stop)
7	**EXHAUST 0000 m³h**	For TS1, enter exhaust airflow (0000 = fan stop)
8	**TIME 2: -- :--**	Enter TS2 starting time. If empty time slot is inactive.
9	**SUPPLY 0000 m³h**	For TS2, enter supply airflow (0000 = fan stop)
10	**EXHAUST 0000 m³h**	For TS2, enter exhaust airflow (0000 = fan stop)
11	**TIME 3: -- :--**	Enter TS3 starting time. If empty time slot is inactive.
12	**SUPPLY 0000 m³h**	For TS3, enter supply airflow (0000 = fan stop)
13	**EXHAUST 0000 m³h**	For TS3, enter exhaust airflow (0000 = fan stop)
14	**TIME 4: -- :--**	Enter TS4 starting time. If empty time slot is inactive.
15	**SUPPLY 0000 m³h**	For TS4, enter supply airflow (0000 = fan stop)
16	**EXHAUST 0000 m³h**	For TS4, enter exhaust airflow (0000 = fan stop)
If TQ mode		
5	**TIME 1: --:--**	Enter TS1 starting time. If empty time slot is inactive.
6	**SUPPLY 000 %TQ**	For TS1, enter supply torque (000 = fan stop)
7	**EXHAUST 000 %TQ**	For TS1, enter exhaust torque (000 = fan stop)
8	**TIME 2: -- :--**	Enter TS2 starting time. If empty time slot is inactive.
9	**SUPPLY**	For TS2, enter supply torque (000 = fan stop)

	000 %TQ	
10	**EXHAUST 000 %TQ**	For TS2, enter exhaust torque (000 = fan stop)
11	**TIME 3: -- :--**	Enter TS3 starting time. If empty time slot is inactive.
12	**SUPPLY 000 %TQ**	For TS3, enter supply torque (000 = fan stop)
13	**EXHAUST 000 %TQ**	For TS3, enter exhaust torque (000 = fan stop)
14	**TIME 4: -- :--**	Enter TS4 starting time. If empty time slot is inactive.
15	**SUPPLY 000 %TQ**	For TS4, enter supply torque (000 = fan stop)
16	**EXHAUST 000 %TQ**	For TS4, enter exhaust torque (000 = fan stop)
If LS mode with only one 0-10V signal (default)		
5	**TIME 1: --:--**	Enter TS1 starting time. If empty time slot is inactive.
6	**SET VAL. LS 000%**	For TS1, enter coefficient (%) applied to the base link configured between V value and set point value (cfr m³/h≡Vmin and m³/h≡Vmax in setup OR cfr %TQ≡Vmin and %TQ≡Vmax in setup). Select 000 to stop both supply and exhaust fans.
7	**%EXH/SUP 100 %**	For TS1, select airflow ratio between exhaust (fan F2) and supply (fan F1) airflows.
8	**TIME 2: --:--**	Enter TS2 starting time. If empty time slot is inactive.
9	**SET VAL. LS 000%**	For TS2, enter coefficient (%) applied to the base link configured between V value and set point value (cfr m³/h≡Vmin and m³/h≡Vmax in setup OR cfr %TQ≡Vmin and %TQ≡Vmax in setup). Select 000 to stop both supply and exhaust fans.
10	**%EXH/SUP 100 %**	For TS2, select airflow ratio between exhaust (fan F2) and supply (fans F1) airflows.
11	**TIME 3: --:--**	Enter TS3 starting time. If empty time slot is inactive.
12	**SET VAL. LS 000%**	For TS3, enter coefficient (%) applied to the base link configured between V value and set point value (cfr m³/h≡Vmin and m³/h≡Vmax in setup OR cfr %TQ≡Vmin and %TQ≡Vmax in setup). Select 000 to stop both supply and exhaust fans.
13	**%EXH/SUP 100 %**	For TS3, select airflow ratio between exhaust (fan F2) and supply (fans F1) airflows.
14	**TIME 4: --:--**	Enter TS4 starting time. If empty time slot is inactive.
15	**SET VAL. LS 000%**	For TS4, enter coefficient (%) applied to the base link configured between V value and set point value (cfr m³/h≡Vmin and m³/h≡Vmax in setup OR cfr %TQ≡Vmin and %TQ≡Vmax in setup). Select 000 to stop both supply and exhaust fans.
16	**%EXH/SUP 100 %**	For TS4, select airflow ratio between exhaust (fan F2) and supply (fan F1) airflows.

If LS mode with one 0-10V signal for supply and one 0-10V signal for exhaust (via advanced setup)		
5	**TIME 1:** **--:--**	Enter TS1 starting time. If empty time slot is inactive.
6	**LS on** **SUP 000%**	For TS1, enter coefficient (%) applied for supply fan to the base link configured between V value and set point value (cfr m³/h≡Vmin and m³/h≡Vmax in setup OR cfr %TQ≡Vmin and %TQ≡Vmax in setup)
7	**LS on** **EXH 000%**	For TS1, enter coefficient (%) applied for exhaust fan to the base link configured between V value and set point value (cfr m³/h≡Vmin and m³/h≡Vmax in setup OR cfr %TQ≡Vmin and %TQ≡Vmax in setup)
8	**TIME 2:** **--:--**	Enter TS2 starting time. If empty time slot is inactive.
9	**LS on** **SUP 000%**	For TS2, enter coefficient (%) applied for supply fan to the base link configured between V value and set point value (cfr m³/h≡Vmin and m³/h≡Vmax in setup OR cfr %TQ≡Vmin and %TQ≡Vmax in setup)
10	**LS on** **EXH 000%**	For TS2, enter coefficient (%) applied for exhaust fan to the base link configured between V value and set point value (cfr m³/h≡Vmin and m³/h≡Vmax in setup OR cfr %TQ≡Vmin and %TQ≡Vmax in setup).
11	**TIME 3:** **--:--**	Enter TS3 starting time. If empty time slot is inactive.
12	**LS on** **SUP 000%**	For TS3, enter coefficient (%) applied for supply fan to the base link configured between V value and set point value (cfr m³/h≡Vmin and m³/h≡Vmax in setup OR cfr %TQ≡Vmin and %TQ≡Vmax in setup).
13	**LS on** **EXH 000%**	For TS3, enter coefficient (%) applied for exhaust fan to the base link configured between V value and set point value (cfr m³/h≡Vmin and m³/h≡Vmax in setup OR cfr %TQ≡Vmin and %TQ≡Vmax in setup)
14	**TIME 4:** **--:--**	Enter TS4 starting time. If empty time slot is inactive.
15	**LS on** **SUP 000%**	For TS4, enter coefficient (%) applied for supply fan to the base link configured between V value and set point value (cfr m³/h≡Vmin and m³/h≡Vmax in setup OR cfr %TQ≡Vmin and %TQ≡Vmax in setup).
16	**LS on** **EXH 000%**	For TS4, enter coefficient (%) applied for exhaust fan to the base link configured between V value and set point value (cfr m³/h≡Vmin and m³/h≡Vmax in setup OR cfr %TQ≡Vmin and %TQ≡Vmax in setup)
If CPs mode on supply OR exhaust		
5	**TIME 1:** **--:--**	Enter TS1 starting time. If empty time slot is inactive.
6	**SET VAL.** **CPs 000%**	For TS1, enter coefficient (%) applied to the pressure assignment defined in the basic setup. Select 000 to stop both supply and exhaust fans.
7	**%EXH/SUP** **100 %**	For TS1, select airflow ratio between exhaust (fan F2) and supply (fan F1) airflows.
8	**TIME 2:** **--:--**	Enter TS2 starting time. If empty time slot is inactive.
9	**TIME 3:** **--:--**	Enter TS3 starting time. If empty time slot is inactive.
10	**SET VAL.** **CPs 000%**	For TS3, enter coefficient (%) applied to the pressure assignment defined in the basic setup. Select 000 to stop both supply and exhaust fans.
11	**%EXH/SUP** **100 %**	For TS3, select airflow ratio between exhaust (fan F2) and supply (fan F1) airflows.
12	**TIME 4:** **--:--**	Enter TS4 starting time. If empty time slot is inactive.

13	**SET VAL. CPs 000%**	For TS4, enter coefficient (%) applied to the pressure assignment defined in the basic setup. Select 000 to stop both supply and exhaust fans.
14	**%EXH/SUP 100 %**	For TS4, select airflow ratio between exhaust (fan F2) and supply (fan F1) airflows.
15	**TIME 3: --:--**	Enter TS3 starting time. If empty time slot is inactive.
16	**SET VAL. CPs 000%**	For TS3, enter coefficient (%) applied to the pressure assignment defined in the basic setup. Select 000 to stop both supply and exhaust fans.
If CPs mode on SUPPLY+EXHAUST		
5	**TIME 1: --:--**	Enter TS1 starting time. If empty time slot is inactive.
6	**CPs on SUP 100%**	For TS1, enter coefficient (%) applied to the supply pressure assignment defined in the basic setup. Select 000 to stop both supply and exhaust fans.
7	**CPs on EXH 100%**	For TS1, enter coefficient (%) applied to the exhaust pressure assignment defined in the basic setup. Select 000 to stop both supply and exhaust fans.
8	**TIME 2: --:--**	Enter TS2 starting time. If empty time slot is inactive.
9	**CPs on SUP 100%**	For TS2, enter coefficient (%) applied to the supply pressure assignment defined in the basic setup. Select 000 to stop both supply and exhaust fans.
10	**CPs on EXH 100%**	For TS2, enter coefficient (%) applied to the exhaust pressure assignment defined in the basic setup. Select 000 to stop both supply and exhaust fans.
11	**TIME 3: --:--**	Enter TS3 starting time. If empty time slot is inactive.
12	**CPs on SUP 100%**	For TS3, enter coefficient (%) applied to the supply pressure assignment defined in the basic setup. Select 000 to stop both supply and exhaust fans.
13	**CPs on EXH 100%**	For TS3, enter coefficient (%) applied to the exhaust pressure assignment defined in the basic setup. Select 000 to stop both supply and exhaust fans.
14	**TIME 4: --:--**	Enter TS4 starting time. If empty time slot is inactive.
15	**CPs on SUP 100%**	For TS4, enter coefficient (%) applied to the supply pressure assignment defined in the basic setup. Select 000 to stop both supply and exhaust fans.
16	**CPs on EXH 100%**	For TS4, enter coefficient (%) applied to the exhaust pressure assignment defined in the basic setup. Select 000 to stop both supply and exhaust fans.
For all working modes		
17	**DAY OFF N**	Select Y if you wish to activate the day OFF option
18	**MONDAY AUTO**	If DAY OFF option activated : for MONDAYs select AUTO (normal time slots setup is active) or OFF (no ventilation on Monday)
19	**TUESDAY**	

	AUTO	If DAY OFF option activated : for TUESDAYs select AUTO (normal time slots setup is active) or OFF (no ventilation on Monday)
20	**WEDNESDAY AUTO**	If DAY OFF option activated : for WEDNESDAYs select AUTO (normal time slots setup is active) or OFF (no ventilation on Monday)
21	**THURSDAY AUTO**	If DAY OFF option activated : for THURSDAYs select AUTO (normal time slots setup is active) or OFF (no ventilation on Monday)
22	**FRIDAY AUTO**	If DAY OFF option activated : for FRIDAYs select AUTO (normal time slots setup is active) or OFF (no ventilation on Monday)
23	**SATURDAY AUTO**	If DAY OFF option activated : for SATURDAYs select AUTO (normal time slots setup is active) or OFF (no ventilation on Monday)
24	**SUNDAY AUTO**	If DAY OFF option activated : for SUNDAYs select AUTO (normal time slots setup is active) or OFF (no ventilation on Monday)
…	…	…

3.3.2 Wiring diagram

The time schedules are activated by connecting IN3 and +12V

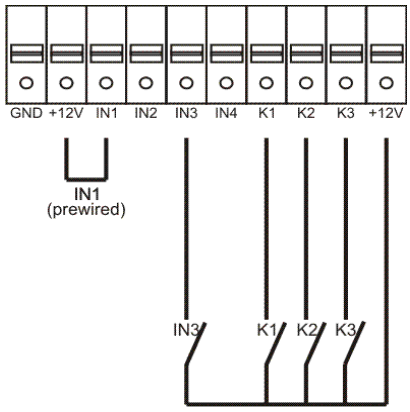

IN3 closed ⇨ AUTO mode (scheduler):
K1-K2-K3 inactive

IN3 open ⇨ AUTO mode inactive:
Contacts K1-K2-K3 mode (CA/LS/CPs/TQ/OFF)

3.4 Alarms

3.4.1 Alarm types

17 different alarms are available:

Type 1: Alarm indicating a fan failure.

This alarm indicates a failure of fan FX.

This problem is usually caused by the motor. If not, the failure can be caused by an internal cable or by the TAC5 DM/DR circuit.

See **1** in table 3.3.2 below.

Type 2: Alarm on the pressure variation (CA and LS modes only).

This alarm indicates a pre-established pressure level has been reached on fan FX.

Pressure alarm setup in CA or LS mode (see § 3.2.1.1 and 3.2.3.1):

	PRESSURE ALARM?	The pressure alarm is optional. If you do not wish it select N and skip to step 16. Otherwise select Y.
	∆P SUP	Type in the pressure increment for the supply airflow.
	∆P EXH	Type in the pressure increment for the exhaust airflow.
	INIT Pa REF?	Do you wish to (re-)configure the reference pressure for the supply and the exhaust airflows? Y or N. (this is optional if it has been done previously)
	m³h INIT	If Y is selected, enter nominal airflow at which you wish to initialize the reference pressure. (same airflow for exhaust and supply air)
	Pa REF INIT  **xxxx m³h** **xxxx Pa**	Initializing the reference pressure… After +/-1 minute, the system will memorize the calculated pressure value of the fan as the reference pressure. While initializing the airflow and pressure on F1 is displayed.

See **2** in table below

Type 3: Alarm indicating a problem while initializing reference pressure for a pressure alarm.

4 possibilities:

- Actual airflow < requested airflow: The requested working point is 'too high' (too much pressure) for the maximal available pressure at the requested airflow for this fan.
- Actual airflow > requested airflow: the nominal airflow requested to initialize the pressure alarm cannot be reached because the lower limit of the fan's operating zone has been reached.
- Very unstable pressure (pumping).
- Assigned airflow not reached after 3 minutes.

Pa_{ref} cannot be identified and the fans are stopped.

Press the 'RESET' key on the TAC5 DM/DR circuit.

- If it occurs during initializing an alarm pressure 2 options: 1. No action is taken: the control will operate without pressure alarm 2. Corrective action is taken (change the working point to one well located in the working zone of the fan, by reducing the pressure system, modifying the nominal airflow,…) and restart the setup operation.
- If it occurs during initializing of the assignment pressure in CPs mode: A corrective action must be taken (change the working point to one well located in the working zone of the fan, by reducing the pressure system, modifying the nominal airflow, …) and restart the setup operation.

See **3** in table below.

Type 4: Alarm indicating the system cannot fulfil the assignment.

The assignment (keeping certain airflow or a certain pressure constant) cannot be fulfilled because the upper or lower limit of the fan's working zone has been reached.

See **4** in table below.

Type 5: Alarm indicating a data failure in the control circuit.
Crucial data from the circuit board has been lost. Try a TOTAL RESET of the data using the advanced setup.
If still not solved send the defect TAC5 DM/DR circuit for reprogramming.
See **5** in table below.

Type 6: Fire Alarm with an external contact connected to a fire detection system (via an external contact).
After a fire alarm it is necessary to perform a RESET (via the RESET button on the TAC5 DM/DR circuit to return to normal operation).
See **6** in table below. For more details, see §3.4.4.

Type 7: Alarm indicating maintenance is expected. (for configuration see "advanced setup):
SERVICE ALARM: indicates the fan operating time (in hours) has exceeded a certain limit set during the configuration.
STOP FAN: indicates the fan operating time (in hours) has exceeded a certain limit set during the configuration. This alarm stops the fans.
See **7** in table below.

Type 8: indicating a communication breakdown between the TAC5 DM/DR circuit and the RC.
This alarm indicates a communication problem between the 2 modules of the TAC5 DM/DR regulation. (only if RC option)
See **8** in table below.

Type 9: Alarm indicating a T° sensor T1/T2/T3 failure.
One or more of the T° sensors T1/T2/T3 connected to the TAC5 DM/DR circuit and mounted on heat exchanger is defect or not connected. These sensors are crucial for the by-pass control and the antifrost procedure.
After correction of the failure press 'RESET' on the TAC5 DM/DR circuit.
See **9** in table below.

**Type 10: **

Type 11: Alarm indicating failure on T° sensor T5 (only with external BA/KW).
It indicates a failure of the T° sensor T5 located in the supply duct and connected to the TAC5 DM/DR circuit (opened or short circuit) or that it is not connected. This sensor is used to regulate the post-heating or post-cooling function in the case of comfort T° regulation on T5 or to control the high and low thresholds for the limitation of the supply air temperature in the case of comfort T° regulation on T2.
After fixing the failure, press 'RESET' with SETUP on the TAC5 DM/DR circuit.
See **11** in table below.

Type 12: Alarm indicating that the comfort T° is too low relative to set point T° (only with post heating option).
This alarm indicates that the comfort T° set point cannot be reached (actual T° lower than set point during 15 minutes, or 30 minutes if comfort on T2 instead of T5, while post heating is at maximum)
See **12** in table below.

Type 13 and 14: Alarm indicating anti-frosting alert (only with KWin or BAin).
- With KWin or BAin option: In certain air T° conditions as measured on the exhaust airflow after the heat recovery, indicating that the external electrical KWin or hydraulic (BAin) preheating coil has reached its limit, the TAC5 DM/DR control can take over to guarantee the anti-frost function.

a) Alarm type 13: If T° < assignment T°-1,5°C for more than 5 minutes: supply and exhaust airflow reduction of 33% if CA or LS and of 25% if CPs, for 15 minutes.
b) Alarm type 14: If T° < -5°C during 5 minutes, fans are stopped. Press RESET on the TAC5 DM/DR circuit to restart the unit.

See **13 & 14** in table below.

Type 15: Alarm indicating that the comfort T° is too high relative to set point T° (only with post cooling option).
This alarm indicates that the comfort T° set point cannot be reached (actual T° higher than set point during 15 minutes, or 30 minutes if comfort on T2 instead of T5, while post cooling is at maximum).

See **15** in table below.

Type 16: Alarm indicating that the supply T° is too low in absolute (only with post heating or cooling option).

This alarm indicates that the supply temperature (T5) is lower than 5°C. The fans are stopped during 1 minute. The alarm is configurable through the advanced setup and is disabled by default.

After fixing the failure, press RESET on the TAC5 DM/DR circuit.

See **16** in table below.

Type 17: Alarm indicating hydraulic coils anti-frosting alert (only with hydraulic post heating outside the unit, BA, or even if external preheating battery, BAin).

This alarm indicates that the anti-frost protection temperature of the hydraulic coil is lower than 4°C. The 3 ways valve is automatically commanded to be opened at 100% during 15 minutes and the pump contact is commanded closed (WP-WP contact on SAT BA/KW). If the fans turn, the alarm is sent after 2 minutes for BAin coil and immediately for the others; if the fans are stopped, the alarm is sent after 5 minutes.

After fixing the failure, press RESET on the TAC5 DM/DR circuit.

See **17** in table below.

3.4.2 Alarm table

	Actions on the TAC5 DM/DR circuit				Action on fans
Type	**Display (1)**	**LED ALARM**	**R2 relay of SAT3 (O.R.1)**	**LED AF**	
1	**ALARM FANx**	ON	Closed	/	Stopped
2	**PRESSURE ALARM**	ON	Closed	/	/ (2)
3	**ALARM INIT Pa**	ON	Closed	/	Stopped
4	**ALARM CA, LS or CP**	ON	/	/	/
5	**DATA ERROR**	ON	Closed	/	Stopped
6	**FIRE ALARM**	ON	Closed	/	(3)
7	**ALARM SERVICE** **FAN STOP SERVICE**	ON ON	Closed Closed	/ /	/ Stopped
8	**CB COM ERROR**	/	/	/	/
9	**ALARM T° SENSOR 1/2/3**	ON	Closed	/	Stopped
10	**/**	/	/	/	/
11	**ALARM T° SENSOR 5**	ON	Closed	/	/
12	**ALARM POSTHEAT T° TOO LOW**	ON	/	/	/
13	**AF T° ALARM AIRFLOW REDUCED**	ON	/	ON	Reduced
14	**AF T° ALARM STOP FANS**	ON	Closed	Blinking	Stopped
15	**ALARM POSTCOOL T° TOO HIGH**	ON	/	/	/
16	**AFREC ON STOP FANS**	ON	Closed	/	Stopped
17	**AF BA STOP FANS**	ON	Closed	/	Stopped

/ = no action

(1) Detailed text is displayed in successive screens. (Detailed texts available *on* www.lemmens.com)

(2) Unless the status has been changed in advanced setup to stop the fans.
(3) See details in §3.4.4.

3.4.3 Wiring diagrams

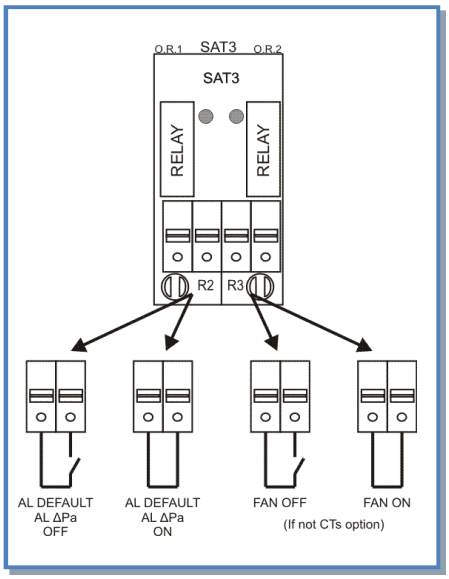

The alarm status is returned by the SAT3 module (option) via a potential-free contact (O.R.1).

3.4.4 Fire alarm

The TAC5 DM/DR control can be connected to a fire detection system.

3.4.4.1 Setup

The default settings are:

- IN2: normally open contact.
- Supply and exhaust airflows (or torques): 0 m³/h (or 0 %TQ)

The supply / exhaust airflow (or torque) configuration is made using the advanced setup.

See the *www.lemmens.com* website

3.4.4.2 Wiring diagram of fire alarm

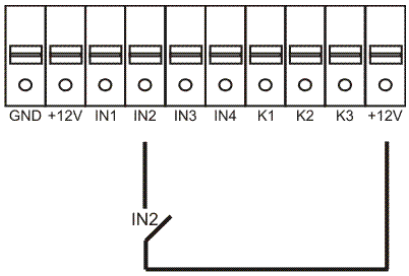

If IN2 12V closed = fire alarm activated (this logic can be reversed via advanced setup menu)

3.5 BOOST function

The BOOST function allows forcing a pre-set airflow overruling all other configurations.
Activation:

- either by contact (default) that is **BOOST on contact**,
- or automatically from moisture threshold measured by a sensor connected to the control board, that is **BOOST on RH**[i].

3.5.1 BOOST on contact

Activation by IN4 contact.

3.5.1.1 Setup

The configuration is made via the advanced setup
Full details: see the technical documentation on our website *www.lemmens.com*

3.5.1.2 Wiring diagram

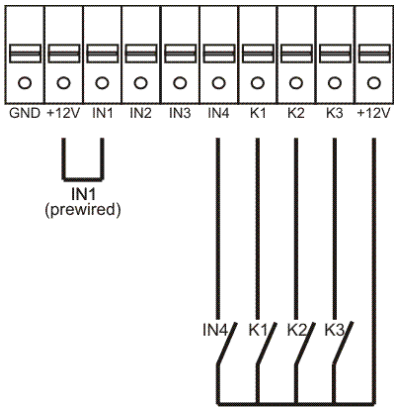

IN4 closed ⇨ BOOST mode active (K1-K2-K3 inactive)

IN4 opened ⇨ BOOST mode inactive:
Contacts K1-K2-K3 mode (CA/LS/CPs/TQ/OFF)

3.5.2 BOOST on RH[i]

Automatic activation from a moisture (RH) threshold measured by a sensor connected to the control board on K3 contact. The selection of this feature and the definition of the link between the humidity level and the 0-10V signal are configured in the advanced setup.

When the voltage on K3 corresponding to the humidity level of the activation threshold is exceeded (RH ON = 60% by default), the BOOST starts. See chart with red arrow here below.

When the voltage drops below the value corresponding to the humidity level of the deactivation threshold (RH OFF = 40% by default), the BOOST stops. See chart with blue arrow here below.

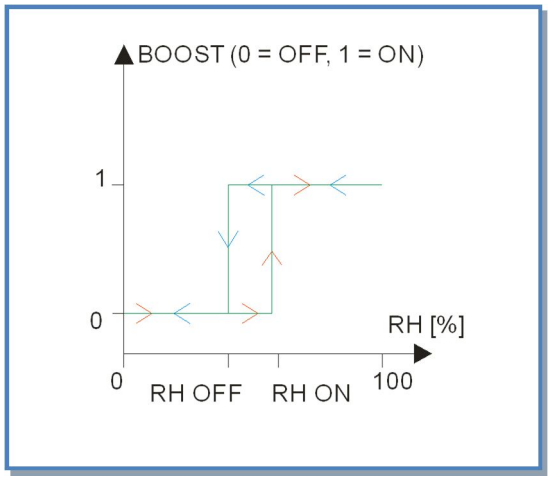

3.5.2.1 Setup

The configuration is done through the ADVANCED SETUP.

- Selecting BOOST activation by relative humidity threshold.
- The definition of the link between the humidity level and the 0-10V signal of the sensor wired on K3 connector.
- Definition of the upper humidity threshold for activating the boost (default = 60%).
- Definition of the lower humidity threshold for deactivating the boost (default = 40%)

Full details: see the technical documentation on our website www.lemmens.com

3.5.2.2 Wiring diagram

-

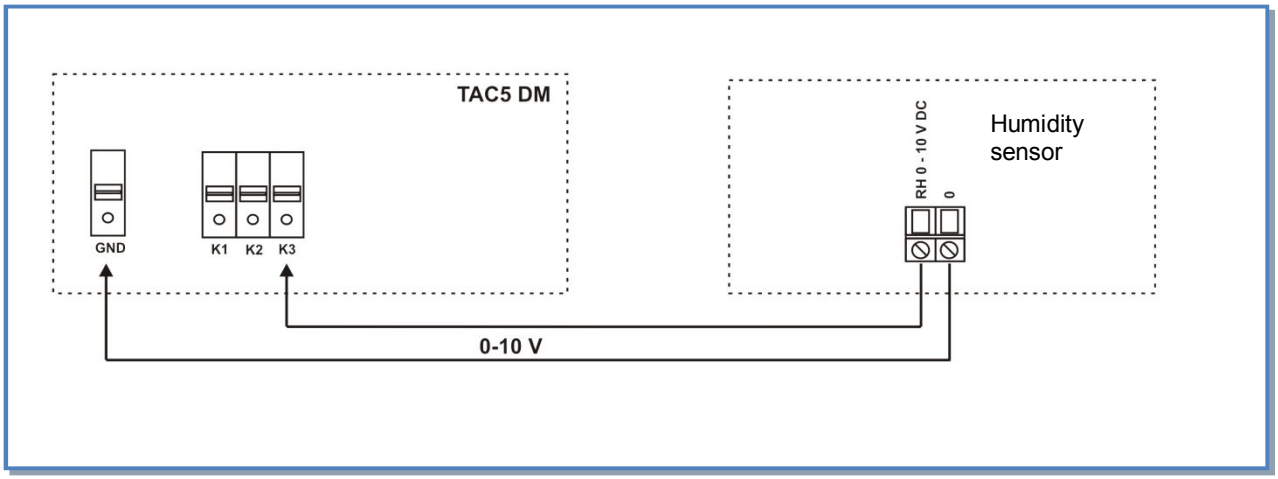

N.B.: connection to the humidity sensor may vary depending on the model used.

3.6 BYPASS function (free cooling)

The counter flow heat exchanger is fitted with a 70% bypass.

According to inside and outside temperatures, the TAC5 DM/DR control will monitor the opening/closing of the bypass damper. The by-pass is delivered completely wired and motorized from factory. No wiring or installation is required by the installer.

3.6.1 Operating description

Opening of by-pass (*) if all following conditions are met:

- Outside T° (sensor T1) < inside T° (sensor T2) – 1°C.
- Outside T° (sensor T1) > 15°C.
- Inside T° (sensor T2) > 22°C.

Closing of by-pass if one of the following conditions is met:

- Outside T° (sensor T1) > inside T° (sensor T2).
- Outside T° (sensor T1) < 14°C.
- Inside T° (sensor T2) < 20°C.

All these temperature SET values can be modified using ADVANCED SETUP (see *www.lemmens.com*)

(*)When the bypass is opened, the pressure alarm is deactivated.

3.6.2 Additional functions

- When the bypass is open fans may :
  - Either continue to operate the same way as when the bypass is closed (default operating mode).
  - Either operate at a fixed exhaust and supply airflow (or torque) rate. These airflow (or torque) values can be (re)set via the AVANCED SETUP (see www.lemmens.com).

- It's possible to force the opening of the bypass via an external contact between IN2 and +12V independently of T° (setup via ADVANCED SETUP – if the option "bypass" active on IN2, pressure alarm and fire alarm can't be used).

Full details: see the technical documentation on our website www.lemmens.com

3.6.3 Wiring diagram

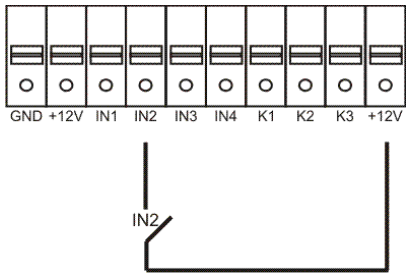

IN2 open ⇨ automatic bypass operation in function of T1, T2 and setup values.

IN2 closed ⇨ bypass is open whatever T1 and T2 values.

3.7 Opening / closing of dampers « CT » (via SAT3 option)

The opening and closing of (a) damper(s) mounted at both supply and exhaust air inlets are automatically managed by the TAC5 DM/DR regulation (SAT3 option, damper(s) and actuator(s) are provided by the installer).

The actual fan start up is delayed to allow prior opening of dampers. When fans are stopped the dampers are closed.

3.7.1 Setup

The CTs are enabled through the PRODUCT SETUP.
Full details: see the technical documentation on our website www.lemmens.com

3.7.2 Wiring diagram

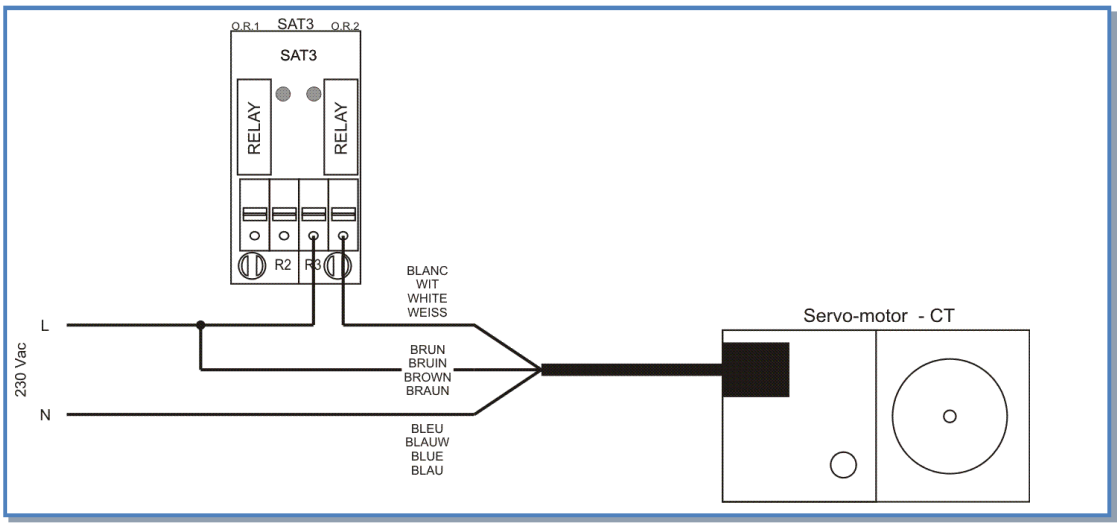

When CT option is selected, the FAN ON output on the SAT3 (O.R.2) becomes unavailable.

3.8 Heat exchanger antifrost protection system

There is a risk of frosting the heat exchanger in the exhaust airflow.
Available anti-frost protection system:

- Supply air volume reduction (less cooling capacity)
- Modulation of capacity of an external electrical coil located before the inlet air enters the heat exchanger (KWin option)
- Modulation of capacity of an external hydraulic coil located before the inlet air enters the heat exchanger (BAin option)

3.8.1 Protection antifreeze via pulse flow reduction

This functionality is built in the standard TAC5 DM/DR and must not be configured by the installer.

3.8.1.1 Operating description

In order to avoid the risk of frosting the heat exchanger, the supply airflow (ventilator 1) is linked to the temperature value of the exhaust airflow measured after the heat exchanger (sensor T3).

- T°(T3) > +5°C : the assigned airflow is as defined by SETUP.

- 1°C < T°(T3) < +5°C : the airflow assigned by SETUP is automatically modified as follows :
  - If CA or LS working mode : the supply airflow will progressively drop down to 33% (AF_{low}) of the assigned airflow (AF_n)
  - If CPs mode, the assigned pressure will drop to 50% (AF_{low}) of the assigned pressure (AF_n)

  In these conditions LED AF is ON.

- T°(T3) < +1°C : the supply airflow is stopped for as long as T°(T3) < +2°C during 5 minutes. In these conditions LED AF is blinking.

All these temperature SET values can be modified using ADVANCED SETUP. (See *www.lemmens.com*)

3.8.1.2 Antifreeze diagram

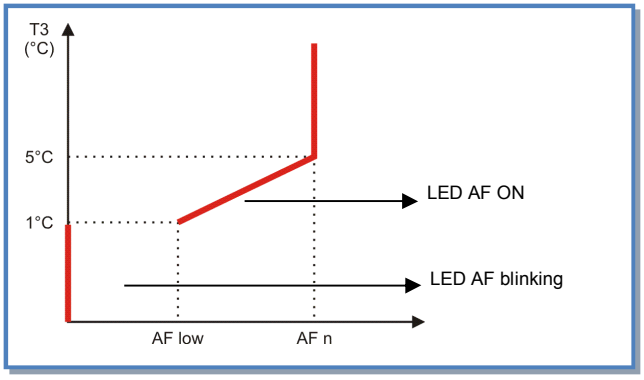

3.8.2 Anti-frost protection with an internal electrical pre-heating coil KWin (option)

If a KWin pre-heating coil option is installed in the HRmural unit, the heat exchanger is protected from frosting by a modulating electrical coil assigned to maintain a pre-set temperature at the outlet of the heat exchanger, in the exhaust airflow.

The mounting and wiring of the pre-heating coil are described in the manual «MI KWin HRmural» or directly in the installation manual for HRmural UP ECO units.

3.8.2.1 Setup of the electrical pre-heating coil KWin

In the advanced setup:
KW ? = KWin.

To start product setup: press the buttons SETUP and ENTER simultaneously until 'ADVANCED SETUP' appears on the screen. Make selection via ↑ ↓ buttons, then press ENTER to confirm. Numbers are introduced digit by digit.

3.8.2.2 Wiring diagram of the electrical pre-heating coil KWin

Wire the +12 VDC command of the solid state relay (SSR) which modulates the power of the electrical coil as in the diagram here below where the +12VDC line is pre-connected in factory in series with a manual reset thermal protection (TH1) and an automatic reset thermal protection (TH2, presence depending on the type of coil).

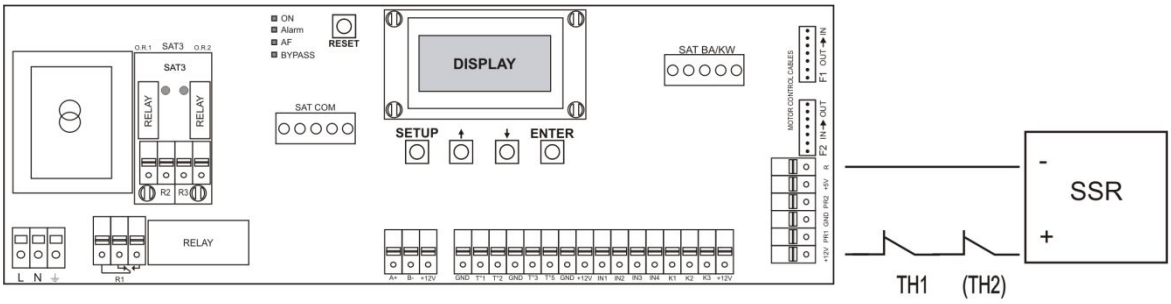

3.8.2.3 Description of the anti-frost protection with the electrical pre-heating coil KWin

The default assignment T° after heat exchange is 1°C. If necessary this value can be changed using the advanced setup feature (see www.lemmens.com).
The anti-frost features will start only when the incoming fresh air temperature will be lower than -4°C (this value may be changed via the advanced setup).

TAC5 DM/DR regulation anti-frost functions:

3.8.2.4 A solid state relay controlled by the TAC5 DM/DR regulation controls the coil's capacity in function of the assigned T° and of resulting exhaust T°.

3.8.2.5 The control only allows the heating coil to be operated if the supply fans are in working.

3.8.2.6 Post-ventilation feature (see advanced setup):
If the fans are requested to stop, the R3 relay is opened, and therefore the power supply to the coils is also shut down. The fans continue running for 90 seconds to insure post-ventilation of the electrical coils.

3.8.2.7 If conditions make that the pre-heating coil KWin does not deliver enough capacity to reach the 'floor T°' assignment, and therefore not insuring the anti-frost duty, the control will modulate the in and out airflows as follows:

a) If T° < -1°C and T° < (floor T° - 1,5°C), for more than 5 minutes:

If CA, TQ and LS mode: reduction of in and outgoing airflows to 66% of the assigned airflows/torques.

If CPs Mode: reduction to 75% of the assigned pressure.

This setup is maintained during 15 minutes, after which the 100% airflow/torque/pressure assignment is re-established.

Actions on TAC5 DM/DR circuit				Action on fans
Display text	**LED ALARM**	**R2 Relay on SAT3 (O.R.1)**	**LED AF**	
AF T° ALARM REDUCED AIRFLOW	ON	/	ON	Assignment reduction

b) If T° < -5°C during 5 minutes the unit is stopped:

Actions on TAC5 DM/DR circuit				Action on fans
Display text	**LED ALARM**	**R2 Relay on SAT3 (O.R.1)**	**LED AF**	
AF T° ALARM STOP FANS	ON	Alarm status	Blink	Stopped

Restart is made by resetting (by pressing the RESET knob on TAC5 DM/DR circuit or via the RC).

For connections, configuration and user instructions: see installation manual "MI KWin HRmural".

3.8.3 Anti-frost protection with an external hydraulic pre-heating coil BAin (option)

If a hydraulic pre-heating coil is installed in the fresh incoming air duct before the unit, the heat exchanger is protected from frosting by modulating the opening of the 3 ways valve of the hydraulic BAin coil in order to maintain a pre-set temperature at the outlet of the heat exchanger, in the exhaust airflow (T3 sensor).

The default assignment T° after heat exchange is 1°C. If necessary this value can be changed using the advanced setup feature (see www.lemmens.com).

The BAin option requires the SAT BA/KW additional board (see§3.9)

TAC5 DM/DR regulation anti-frost functions:

3.8.3.1 If conditions make that the pre-heating coil BAin does not deliver enough capacity to reach the 'floor T°' assignment, and therefore not insuring the anti-frost duty, the control will modulate the in and out airflows: see §3.8.2.4

For connections, configuration and user instructions: see installation manual MI SAT TAC5 BA/KW.

3.9 Regulation for external coil(s) (SAT TAC5 BA/KW option)

3.9.1 With SAT BA/KW option

Via option SAT BA/KW it is possible to control one or two external (from the unit) heat exchanger(s):

- One heating coil
- One water cooling coil
- One heating/cooling coil (reversible coil)
- One heating coil + one cooling coil (separate)
- One electrical coil
- One electrical coil + one cooling coil
- One electrical coil + one post-cooling water coil
- One pre-heating water coil
- One pre-heating water coil and one post-heating water coil
- One pre-heating water coil and one post-heating/post-cooling coil (reversible coil)

SAT BA/KW

- Controls the coil's capacity by keeping a comfort air temperature constant, equals to the assignment. This assignment can be defined for each coil when configuring the setup.
- Controls the water coils anti-frost protection
- Triggers command for circulator(s)
- Cooling/Heating mode control by digital entry. (An extra external system determining in which mode (heat/cool) the coil must operate and delivering the information (free of potential contact) to the SAT BA/KW is necessary).
- Allows shutting down the coils via digital input.

Control features of the TAC5 DM/DR:

4 Assignment failure: see §3.4.1 and 3.4.2

5 Sensor failure alarm : see §3.4.1 and 3.4.2

6 Possibility, through the advanced setup, to get an alarm if the supply temperature (T5 sensor) is lower than 5°C: see §3.4.1 and 3.4.2 for details

For connections, configuration and user instructions: see installation manual MI SAT BA/KW.

.

3.9.2 Without SAT BA/KW option

A post heating electrical coil can be directly controlled by the TAC5 DM/DR (4.1 version or greater)/DR board **provided that there is no pre-heating electrical coil installed**.

3.9.2.1 Setup

In the advanced setup:
KW ? = KWout.

To start product setup: press the buttons SETUP and ENTER simultaneously until 'ADVANCED SETUP' appears on the screen. Make selection via ↑ ↓ buttons, then press ENTER to confirm. Numbers are introduced digit by digit.

3.9.2.2 Wiring diagram

Wire the +12 VDC command of the solid state relay (SSR) which modulates the power of the electrical coil as in the diagram here below where the +12VDC line is pre-connected in factory in series with a manual reset thermal protection (TH1) and an automatic reset thermal protection (TH2, presence depending on the type of coil).

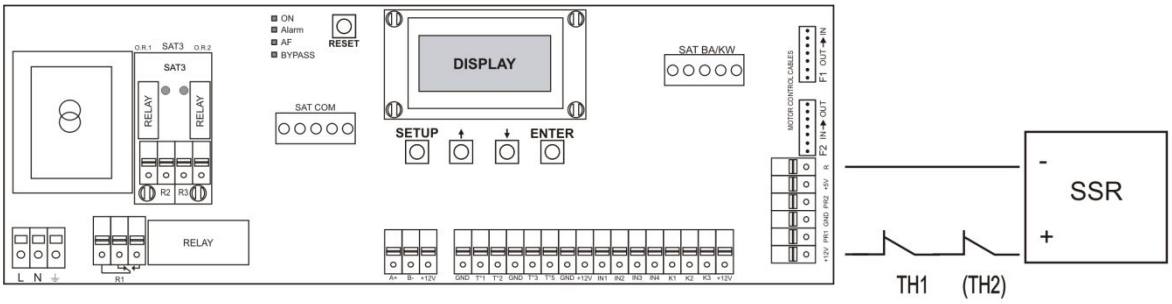

3.10 « FAN ON » signalization (only if no CT option)

It is possible with a SAT3 mounted on the TAC5 DM/DR (option) to provide the fan status (control if actual delivered airflow > 20% of airflow assignment) or if they are stopped, using the R3 relay of one of the SAT3 (O.R.2). This feature provides an increased safety with regard to the start instruction control, because there is a control on the fact that the fan is actually running (closed loop principle).

3.10.1 Wiring diagram

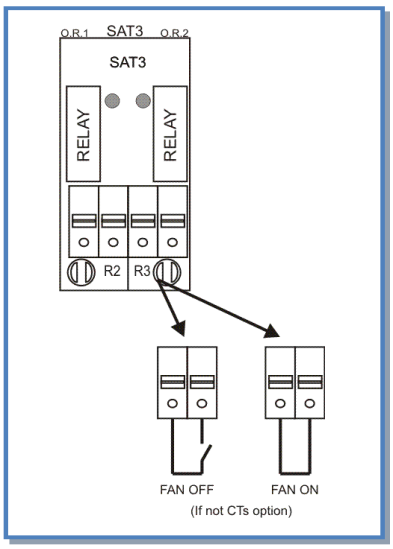

3.11 Advanced setup

The advanced configuration allows modifying the parameters not present in the basic configuration.
Warning: using this feature requires a good knowledge of the TAC5 DM/DR control system.

- Stop fans if pressure alarm activated
- Fans start torque
- Prevent stop of the fans (deactivation of the softstop function)
- Bypass T°
- Airflow if bypass open
- Setup of the input IN2 :
  - fire alarm or
  - pressure alarm or
  - force bypass opening whatever the T°
- Fire alarm configuration
- BOOST configuration :
  - Supply and exhaust airflows (or torque) in BOOST mode.
  - Selecting BOOST activation by contact (default) or by relative humidity (RH) threshold[i] and, in this case:
    - The definition of the link between the humidity level and the 0-10V signal of the sensor wired on K3 connector.
    - Definition of the upper humidity threshold for activating the boost (default = 60%).
    - Definition of the lower humidity threshold for deactivating the boost (default = 40%)
- Output relay O.R.1 and O.R.2 configuration
- AF (anti-freeze) configuration
- Post-ventilation configuration
- Fan run time configuration
- Display alarms only
- If post heating or post cooling:
  - T ° comfort on supply (T5) or extract (T2). In this last case :
    - parameter for multiplying the reaction speed of the post-heating or post-cooling,
    - upper and lower limit value of the temperature reached in the supply duct.
  - Possibility to get an alarm if the supply temperature (T5 sensor) is lower than 5°C.
- In mode LS:
  - possibility to link the supply airflow to another 0-10V signal on the input K3 with the same relationship: the signal considered between the one on input K2 and K3 will be the highest of the two.
  - possibility to drive separately exhaust and supply airflows. Supply airflow rate via a 0-10V signal connected to K2, and exhaust airflow rate via another 0-10V signal connected to K3. The link airflow rate/signal value must be the same.
  - stop of the fans if Vin < and/or > set value(s)
- In CPs mode :
  - positive or negative logical
  - reaction speed of the CPs algorithm
- Configuring communication settings according to the connected SAT:
  - SAT MODBUS: address, baud rate, parity.
  - SAT ETHERNET: IP address obtained automatically (DHCP) or manual configuration.
- Access code configuration
- Factory reset

For complete details see the technical documentation on website *www.lemmens.com*

4 Remote Control

TAC 5 DM/DR control board supports the following interfaces:

- RC – remote control with LCD display (2x8 characters). For TAC5 DR, SAT Modbus is required.
- GRC – graphical remote control with touch screen. For TAC5 DR, SAT Modbus is required.
- EOLE4HR: App for Android, IOS, Windows 7/8/10 for smartphone, tablet and PC. SAT ETHERNET or SAT WIFI is required.
- HVAC commercial KNX interfaces. SAT KNX is required.

4.1 RC – simple remote control with a LCD display (2x8 digits)

The display and the push-buttons from the TAC5 DM/DR circuit are remote to the RC. The RC also allows to switch the fans ON/OFF, to select the airflow speed (OFF / I / II / III) and to switch from the automatic mode to the common mode.

4.1.1 Connecting the RC to the TAC5 DM/DR circuit

4.1.1.1 Open the RC casing (access to the wiring slots)

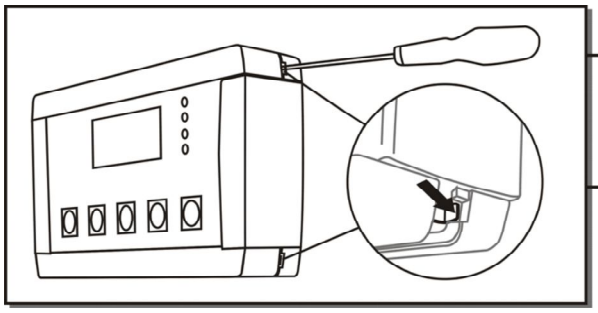

Using a small screwdriver unlock the 4 pins

2 pins on each side

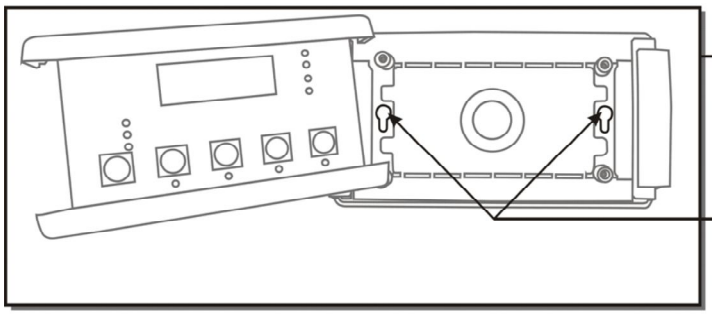

Remove the cover

Points for fixation of the casing
(spacing = 88mm).
RC dimensions = 122 x 66mm

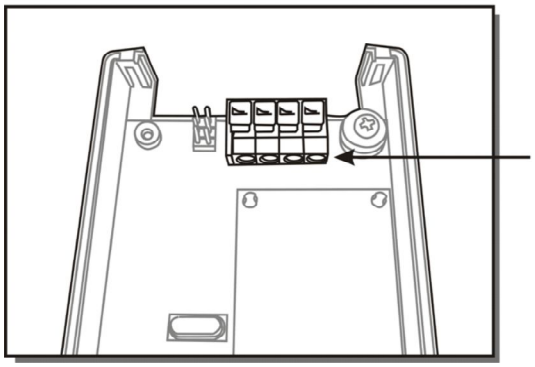

RC wiring terminals

Caution: the RC box is class IP20 and cannot be installed outdoors as such. If you wish to install it outdoors, you need to fasten inside a proper watertight box.

4.1.1.2 Wiring Diagram

- Wiring diagram between RC and TAC5 DM hardware version 4 or higher :

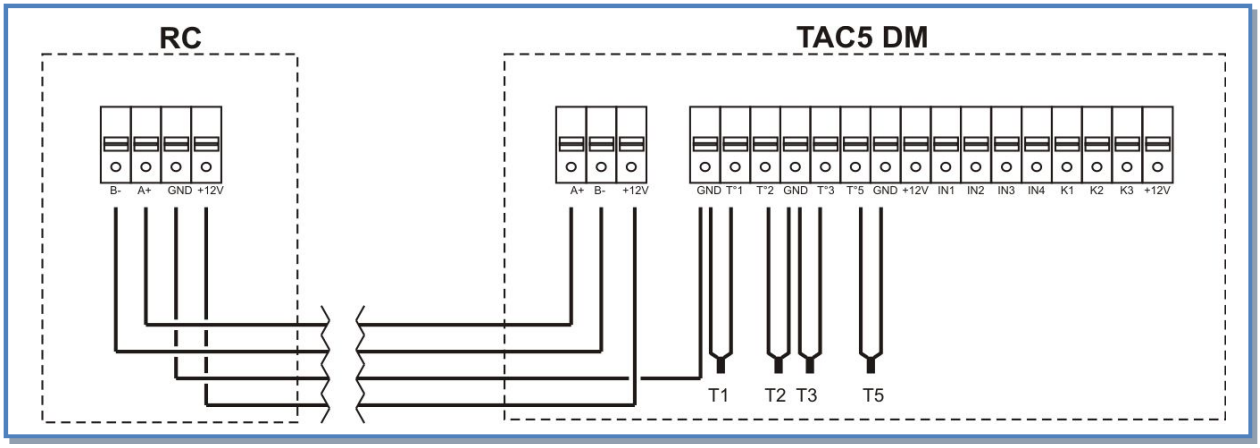

- Wiring diagram between RC and TAC5 DR:

In order to communicate with a RC, the TAC5 DR control board requires a SAT MODBUS which must be plugged on the TAC5 DR connector (located inside the unit).
The assembly must be carried out with the power OFF.

Caution: A bad positioning of the SAT MODBUS on the TAC5 DR circuit may fatally damage both circuits!

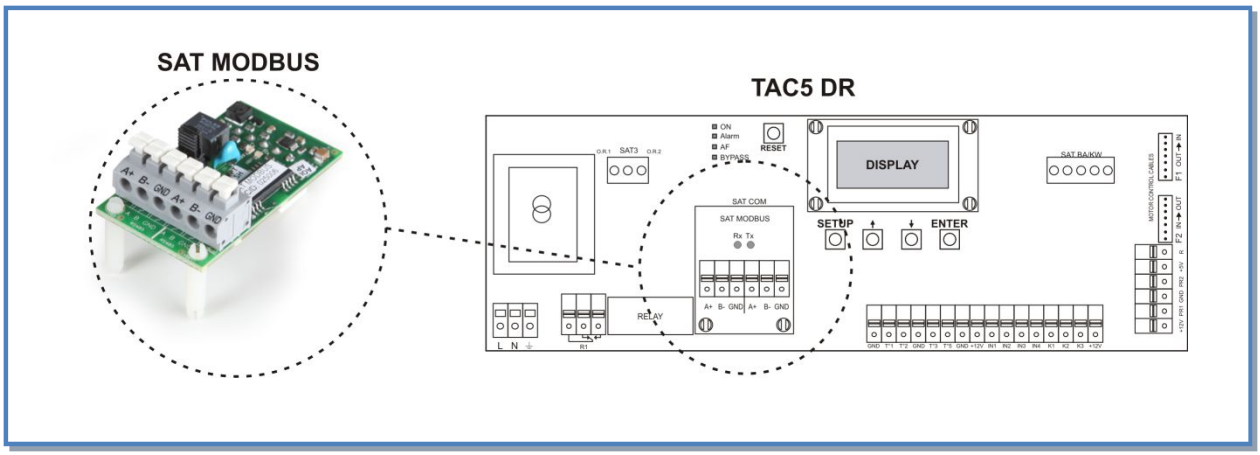

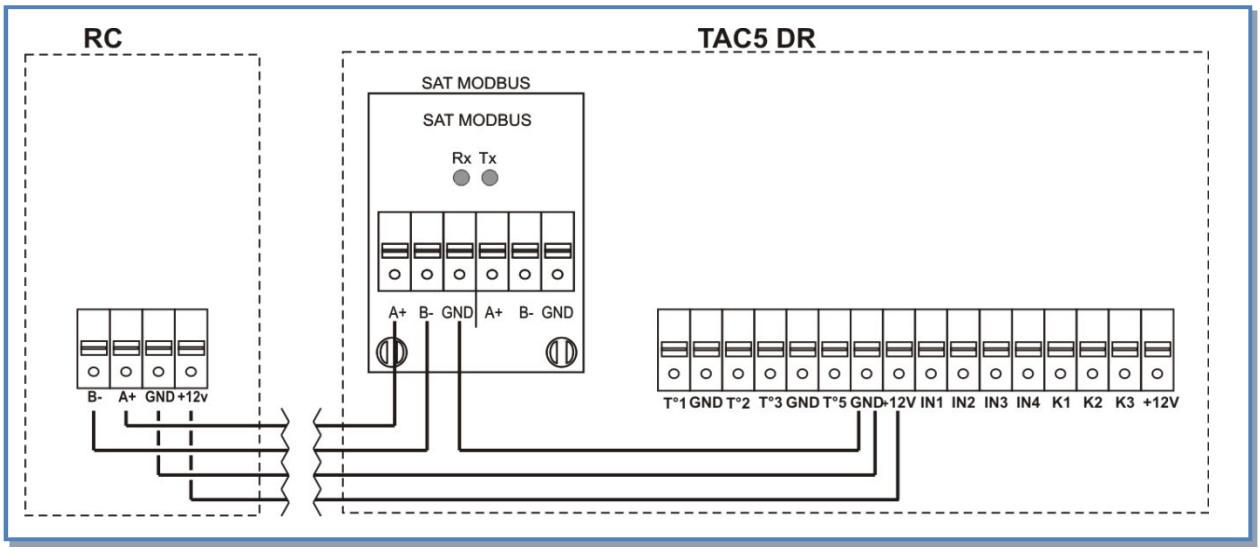

Cable specifications:

- Maximum cable length: 1000 m.
- Recommended cable: category 5 shielded twisted pair (FTP) cable with a section of 0,26 … 0,50 mm ². Use 1 pair to connect GND and +12V and 1 pair to connect B- and A +.
- Keep this communication cable at distance from power cables.
- If the unit is installed in a location with high electro-mechanical interference levels we strongly advise to connect the armoured shield of the TAC5 DM/DR – RC cable on one side of the ground only.
- If the HRmural unit is installed outside, select a suitable cable for outdoor application (UV light, …).

4.1.2 Selecting the Master

"Selecting the master" means the determination of which module of the inputs/outputs on TAC5 DM/DR and the RC will "control" the fans, "controlling" the fans means:

- If CA mode is chosen to be the master means to control the start/stop of the fans as well as to select the airflow.
- If TQ mode is chosen to be the master means to control the start/stop of the fans as well as to select the percentage of fan maximum torque.
- If LS or CPs mode, to be the master means to control the start/stop of the fans as well as to activate/deactivate a different assignment (assignment multiplier).

2 setups are possible:

1) **TAC5 DM/DR circuit is "master"**: contact between terminals IN1 and +12Vdc of TAC5 DM/DR circuit is closed (prewired).
   - The TAC5 DM/DR circuit allows control of the fans through its inputs,
   - The RC allows to configure and to visualize all the parameters on the display and with the LEDs.

2) **RC is "master"**: contact between terminals IN1 and +12Vdc of TAC5 DM/DR circuit is open.
   - The TAC5 DM/DR circuit is then in control of the system and serves as a control hub between fans and the RC,
   - The RC allows to configure and to visualize all the parameters on the display and with the LEDs,
   - The RC controls the fans with the OFF / I / II / III keys and controls the MANU ⇔ AUTO mode (scheduler).

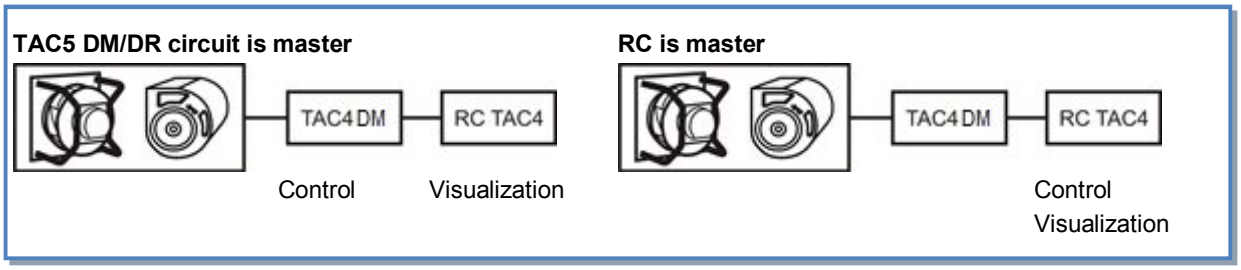

4.1.2.1 Wiring diagram

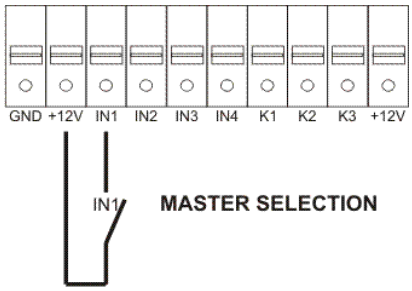

IN1 closed ⇨ TAC5 DM/DR circuit master (prewired)

IN1 open ⇨ RC master
Caution: Use gold-plated contact only

The use of this contact enables to switch automatically from RC master to TAC5 DM/DR master.

Using this you can for instance:

- Work in RC master and switch in position TAC5 DM/DR master to stop automatically the fans (attention, in this case the inputs K1/K2/K3 on the TAC5 DM/DR have to be disconnected from the +12V).
- Work in RC master and switch in position TAC5 DM/DR master to activate automatically a sleep value (attention K1/K2/K3 on the TAC5 DM/DR have to be properly connected to activate this value).

4.1.3 Switching from MANU to AUTO mode (scheduler)

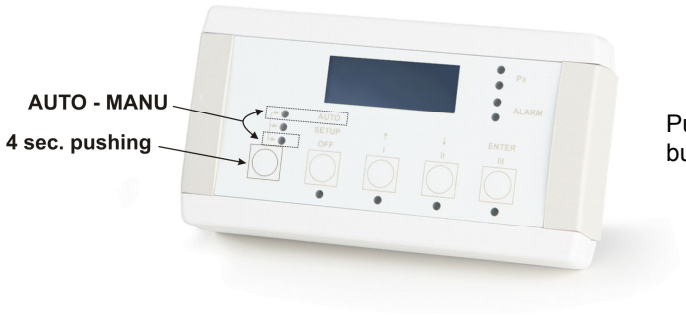

Push 4 seconds on the left push-button to switch to another mode.

[i] From software version 4.0

Although we put a lot of care in the making of our documentation, we cannot be held responsible for any error and/or omissions that could have slipped in.

APPENDIX: Installation control datasheet (to be filled in after starting the installation)

To facilitate any future intervention, specify in this table all settings specific to your installation. Please keep this document handy before contacting us for any problem. Without this could not be able to help you.

Configuration parameters:

1	HRmural model	
2	Working mode	CA/TQ, LS, CPs
3	If CA mode :	m³h K1 = m³h K2 = m³h K3 =
4	If TQ mode	%TQ K1 = %TQ K2 = %TQ K3 =
5	If LS mode :	Vmin = Vmax = m³h / %TQ≡Vmin = m³h / %TQ≡Vmax = % on K3 =
6	If CPs mode:	Assignment Pa= V (or Pa) % on K3 =
7	% EXH/SUP	%
8	Pressure alarm (modes CA / LS only)	Activated? yes / no If yes: Automatic / Manual setup Initialisation: Supply: m³h Pa Exhaust: m³h Pa

Indicate here all changes made in the advanced setup, if any:

Values read off display when HRm in operation:

1	Supply Airflow (or %TQ)	m³/h (or %TQ)
2	Supply pressure	Pa
3	Exhaust airflow (or %TQ)	m³/h (or %TQ)
4	Exhaust pressure	Pa

P.LEMMENS
AIR MOVEMENT COMPANY

P. LEMMENS COMPANY S.A.

Parc Industriel de Sauvenière, 102, Chaussée de Tirlemont, B-5030 GEMBLOUX

TEL : +32 (0) 81 62 52 52, FAX : +32 (0) 81 62 52 53

www.lemmens.com